KENNETH SCHMITT
Town Supervisor

FRANK D. LOMBARDI
Town Councilman
Deputy Supervisor

JOHN D. LUPINACCI
Town Councilman
SUZANNE MC DONOUGH
Town Councilwoman
JONATHAN SCHNEIDER
Town Councilman

TOWN OF CARMEL
TOWN HALL

60 McAlpin Avenue
Mahopac, New York 10541
Tel. (845) 628-1500 • Fax (845) 628-6836
www.carmelny.org

ANN SPOFFORD
Town Clerk

KATHLEEN KRAUS
Receiver of Taxes

MICHAEL SIMONE
Superintendent of Highways
Tel. (845) 628-7474

TOWN BOARD WORK SESSION
Wednesday, December 9, 2015 7:00pm

Pledge of Allegiance – Moment of Silence

6:00pm Executive Session:

1. John Folchetti, PE, Engineering Consultant – Capital Projects

7:00pm Town Board Work Session:

1. Mary Ann Maxwell, Town Comptroller – Consider Budget Revisions #2015/06

2. Mary Ann Maxwell, Town Comptroller – Consider Amending and Adopting 2016 User Fee Schedule

3. Mary Ann Maxwell, Town Comptroller – Consider Awarding Bid for Electric Service

4. Gregory Folchetti, Town Legal Counsel – SEQRA Review – Long Pond Road Improvement District

5. Town Justices Spofford and Jacobellis – Consider Letter of Retirement (Ann Petricig, Account Clerk) and Consider Making Appointment of Account Clerk in the Justice Court Department (Francine Schmansky)

6. Michael Simone, Highway Superintendent – Consider Awarding of Bids

7. Michael Simone, Highway Superintendent – Consider Purchase of 2017 Mack Granite GU712 with Dump Body & Plow Equipment

8. Michael Simone, Highway Superintendent - Consider Resolution of Support – Town Infrastructure Resolution per the NYS Association of Towns

9. Michael Simone, Highway Superintendent – Consider Request to Purchase "Painting of Reflectorized Pavement Stripes"

10. Consider Waiver of Notice of Requirement in Section 64 of the New York State ABC Law with Respect to a Liquor License for Antonino C Food Service, Inc. d/b/a Ristorante Spadafora

11. Richard Franzetti, PE, Town Engineer – Consider Accepting Proposal for the Purchase and Installation of Fence - Town Hall

12. Richard Franzetti, PE, Town Engineer – Consider Accepting Proposal of Maintenance Manager for Lake Casse Park District

13. Richard Franzetti, PE, Town Engineer – Consider Accepting Proposal for Purchase and Installation of Trough & Skimmers for CSD#4

14. Richard Franzetti, PE, Town Engineer –Consider Accepting Proposal for Replacement of Filter Bag for CWD#2

15. Richard Franzetti, PE, Town Engineer – Consider Accepting Proposal for the Purchase and Installation of Two Sand Filter Influent Pumps – CSD#2

16. Richard Franzetti, PE, Town Engineer – Accepting Proposal for Replacement of Generator CWD#4 – Lake Baldwin

17. Consider Resolution of Support for the Formation of a County Wide Taxi Commission

18. Consider Resolution Memorializing Detail Duty Services between the Town of Carmel Police Department and Putnam County Sheriff Department

- **Public Comment (Three (3) Minutes on Agenda Items Only)**
- **Town Board Member Comments**

Open Forum:

- **Public Comments on New Town Related Business (Three (3) Minutes Maximum per Speaker for Town Residents, Property Owners & Business Owners Only)**
- **Town Board Member Comments**
- **Adjournment**

Executive Session:

1. Police Chief Michael Cazzari – 911 Procedure/Protocol

TOWN OF CARMEL
BUDGET REVISIONS NOVEMBER 2015 - #2015/06

☑ Work Session 12/9/15 #1

☐ Agenda

BUDGET REVISION NUMBER	ACCOUNT	ACCOUNT TITLE & TRANSFER DESCRIPTION		INCREASE USES & SOURCES OF FUNDS	DECREASE USES & SOURCES OF FUNDS
GENERAL FUND					
1	100-1420-0044	LABOR LEGAL SERVICES		180,000.00	
	100-1989-2555	**BUILDING PERMIT FEES**	*	**70,000.00**	
	100-1989-2709	**EMPLOYEE CONTRIBUTIONS**	*	**10,000.00**	
	100-1989-3005	**STATE AID - MORTGAGE TAX**	*	**100,000.00**	
		- PROVIDE FOR LABOR LEGAL SERVICES			
2	100-1330-0019	TAX RECEIVER OTHER COMPENSATION		2,591.67	
	100-7020-0019	RECREATION STAFF PAID ABSENCES		6,470.75	
	100-1989-9877	**FUND BALANCE COMPENSATED ABSENCES**	*	**9,062.42**	
		- PROVIDE FOR EMPLOYEE COMP TIME PAYOUT PER CONTRACT			
3	100-3120-0021	POLICE MOTOR VEHICLES		35,795.00	
	100-3120-0011	POLICE PERS SVCS UNIFORM			8,500.00
	100-1989-2681	**INSURANCE RECOVERY**	*	**27,295.00**	
		- PROVIDE/TRANSFER FOR THE PURCHASE OF POLICE VEHICLE			
		FROM INSURANCE CLAIM			
4	100-1930-0040	CERTIORARI SETTLEMENTS		1,800.00	
	201-4540-0048	CARMEL AMBULANCE DISTRICT		100.00	
	303-3410-0048	CARMEL FIRE PROTECTION DISTRICT #3		400.00	
	622-8310-0048	WD#2 EXT OTHER OPERATING EXPENSES		400.00	
	100-1989-9876	**RESERVE FOR CERTIORARI SETTLEMENTS**	*	**1,800.00**	
	201-4540-0083	WORKERS COMP INSURANCE			100.00
	303-3410-0099	WORKERS COMP INSURANCE			400.00
	622-8310-0099	WD#2 EXT REPAIR RESERVE FUND			400.00
		- PROVIDE/TRANSFER FOR CERTIORARI SETTLEMENTS			
5	100-1410-0080	TOWN CLERK EMPLOYEE BENEFITS		4,000.00	
	100-1620-0012	BUILDING STAFF OVERTIME		1,000.00	
	100-1410-0086	RETIREE HEALTH INSURANCE			4,000.00
	100-1620-0080	BUILDING EMPLOYEE BENEFITS			1,000.00
		- TRANSFER FOR HEALTH INSURANCE/OVERTIME			
6	100-1110-0040	JUSTICE COURT OFFICE EXPENSES		1,000.00	
	100-1315-0040	COMPTROLLER OFFICE EXPENSES		500.00	
	100-1410-0040	TOWN CLERK CONTRACTUAL EXPENSES		300.00	
	100-1670-0045	CENTRAL ADVERTISING EXPENSES		500.00	
	100-1970-0040	OFFICE SUPPLIES		1,000.00	
	100-8010-0040	ZONING BOARD CONTRACTUAL EXPENSES		200.00	
	100-8020-0040	PLANNING BOARD CONTRACTUAL EXPENSES		100.00	
	100-1110-0086	RETIREE HEALTH INSURANCE			1,000.00
	100-1315-0086	RETIREE HEALTH INSURANCE			500.00
	100-1410-0086	RETIREE HEALTH INSURANCE			300.00
	100-1620-0040	BUILDING CONTRACTUAL EXPENSES			1,000.00
	100-1680-0040	INFORMATION TECH CONTRACTUAL EXPENSES			500.00
	100-8010-0080	ZONING BOARD EMPLOYEE BENEFITS			200.00
	100-8020-0080	PLANNING BOARD EMPLOYEE BENEFITS			100.00
		- TRANSFER FOR MISC EXPENSES			
7	100-3120-0012	POLICE STAFF OVERTIME		145,000.00	
	100-3120-0010	POLICE PERS SVCS - NON UNIFORM			10,000.00
	100-3120-0013	POLICE TEMP STAFF - JAIL			20,000.00
	100-3120-0016	POLICE STAFF HOLIDAY COMP			40,000.00
	100-3120-0080	POLICE NON UNIFORM RETIREMENT			10,000.00
	100-3120-0081	POLICE RETIREMENT UNIFORM			15,000.00
	100-3120-0083	POLICE WORKERS COMP			15,000.00
	100-3120-0084	POLICE HEALTH INSURANCE			25,000.00
	100-3120-0086	POLICE RETIREE HEALTH INSURANCE			10,000.00
		- TRANSFER FOR POLICE OVERTIME			
8	100-3120-0040	POLICE CONTRACTUAL EXPENSES		10,000.00	
	100-3120-0046	POLICE RENTALS/LEASES		2,300.00	
	100-3124-0082	POLICE K9 SOCIAL SECURITY		100.00	
	100-3120-0041	POLICE MOTOR VEHICLE FUEL			10,000.00
	100-3120-0084	POLICE HEALTH INSURANCE			2,300.00
	100-3124-0012	POLICE K9 OVERTIME			100.00
		- TRANSFER FOR MISC POLICE EXPENSES			

TOWN OF CARMEL
BUDGET REVISIONS NOVEMBER 2015 - #2015/06

BUDGET REVISION NUMBER	ACCOUNT	ACCOUNT TITLE & TRANSFER DESCRIPTION		INCREASE USES & SOURCES OF FUNDS	DECREASE USES & SOURCES OF FUNDS
9	100-7020-0045	RECREATION BLDG SPECIAL REPAIRS		17,400.00	
	100-7110-0045	PARK MAINTENANCE CONTRACT			2,400.00
	100-7110-0046	PARK FACILITY LEASES			5,000.00
	100-7140-0013	RECREATION PLAYGROUND TEMP STAFF			10,000.00
		- TRANSFER FUNDS FOR NEW ROOF			
10	100-7020-0040	REC ADMIN CONTRACTUAL EXPENSES		1,000.00	
	100-7112-0042	MCDONOUGH FIELDS UTILITIES		500.00	
	100-7118-0042	BALDWIN MEADOWS UTILITIES		150.00	
	100-7119-0040	DOG PARK CONTRACTUAL EXPENSES		20.00	
	100-7020-0020	REC ADMIN OFFICE EQUIPMENT			500.00
	100-7020-0044	REC BLDG CONCESSION EXPENSES			500.00
	100-7112-0041	MCDONOUGH SKATE PARK			500.00
	100-7118-0040	BALDWIN MEADOWS CONTRACTUAL EXPENSES			150.00
	100-7180-0020	BEACH EQUIPMENT			20.00
		- TRANSFER FOR MISC RECREATION EXPENSES			
HIGHWAY FUND					
11	500-5110-0014	GENERAL REPAIR LONGEVITY		1,039.00	
	500-5130-0020	MACHINERY REPAIR TOOLS		1,000.00	
	500-5142-0084	HEALTH INSURANCE		2,000.00	
	500-5110-0013	GENERAL REPAIR TEMPORARY LABOR			1,039.00
	500-5130-0084	HEALTH INSURANCE			1,000.00
	500-5142-0083	WORKERS COMP INSURANCE			2,000.00
		- TRANSFER FOR MISC HIGHWAY EXPENSES			
LAKE CASSE PARK DISTRICT					
12	401-7140-0040	CONTRACTUAL EXPENSES		2,300.00	
	401-7140-0048	OTHER EXPENDITURES		200.00	
	401-7140-0041	SUPPLIES & MATERIALS			600.00
	401-7140-0046	CONTRACT SPECIAL SERVICES			500.00
	401-7140-0049	SERVICES OTHER DEPTS/GOVTS			450.00
	401-7140-0082	SOCIAL SECURITY			750.00
	401-7140-0083	WORKERS COMP INSURANCE			200.00
		- TRANSFER FOR GENERATOR REPAIR			
CARMEL WATER DISTRICT #2					
13	602-8310-0020	EQUIPMENT		1,000.00	
	602-8310-0040	CONTRACTUAL EXPENSES		5,000.00	
	602-8310-0047	EMERGENCY REPAIRS		4,000.00	
	602-8310-0090	CONTINGENCY			10,000.00
		- TRANSFER FOR EQUIPMENT/EMERGENCY REPAIRS			
CARMEL WATER DISTRICT #8					
14	608-8310-0047	EMERGENCY REPAIRS		15,000.00	
	608-8310-9909	**APPROPRIATED FUND BALANCE**	*	**15,000.00**	
		- PROVIDE FOR EMERGENCY REPAIRS			
CARMEL WATER DISTRICT #9					
15	609-8310-0040	CONTRACTUAL EXPENSES		2,000.00	
	609-8310-0047	EMERGENCY REPAIRS			2,000.00
		- TRANSFER FOR CONTRACTUAL EXPENSES			
CARMEL WATER DISTRICT #10					
16	610-8310-0040	CONTRACTUAL EXPENSES		2,000.00	
	610-8310-0042	UTILITIES EXPENSES		300.00	
	610-8310-0047	EMERGENCY REPAIRS			2,300.00
		- TRANSFER FOR CONTRACTUAL EXPENSES			
CARMEL WATER DISTRICT #12					
17	612-8310-0042	UTILITIES EXPENSES		2,000.00	
	612-8310-0047	EMERGENCY REPAIRS			2,000.00
		- TRANSFER FOR UTILITIES EXPENSES			

TOWN OF CARMEL
BUDGET REVISIONS NOVEMBER 2015 - #2015/06

BUDGET REVISION NUMBER	ACCOUNT	ACCOUNT TITLE & TRANSFER DESCRIPTION	INCREASE USES & SOURCES OF FUNDS	DECREASE USES & SOURCES OF FUNDS
CARMEL SEWER DISTRICT #2				
18	702-8130-0046	PURCHASE OF WATER	500.00	
	702-8130-0040	CONTRACTUAL EXPENSES		500.00
		- TRANSFER FOR PURCHASE OF WATER		
CARMEL SEWER DISTRICT #3				
19	703-8130-0042	UTILITIES EXPENSES	400.00	
	703-8130-0099	REPAIR RESERVE FUND		400.00
		- TRANSFER FOR UTILITIES EXPENSES		
CARMEL SEWER DISTRICT #4				
20	704-8130-0048	OTHER OPERATING EXPENSES	1,000.00	
	704-8130-0099	REPAIR RESERVE FUND		1,000.00
		- TRANSFER FOR MISC EXPENSES		
CARMEL SEWER DISTRICT #7				
21	707-8130-0046	PURCHASE OF WATER	100.00	
	707-8130-0049	SERVICES OTHER DEPT/GOVT		100.00
		- TRANSFER FOR MISC EXPENSES		
22	707-8130-0142	MICRO - UTILITIES	2,000.00	
	707-8130-0140	MICRO - CONTRACTUAL EXPENSES		2,000.00
		- REVISE MICROFILTRATION COSTS		
DRAINAGE CAPITAL PROJECT				
23	900-1989-0040	CONTRACTUAL EXPENSES	7,500.00	
	900-1989-0012	PROJECT LABOR OVERTIME		3,500.00
	900-1989-0048	OTHER PROJECT EXPENSES		2,000.00
	900-1989-0080	EMPLOYEE BENEFITS		2,000.00
		- TRANSFER FOR CAPITAL EXPENSES		
PARK COMMUNITY CENTER CAPITAL PROJECT				
24	915-7140-0040	CONTRACTUAL EXPENSES	8,500.00	
	915-7140-0044	PROJECT ENGINEERING		8,500.00
		- TRANSFER FOR TREE CUTTING/CLEANUP		
HIGHWAY RESUFACING CAPITAL PROJECT				
25	950-5112-0045	CONTRACTED PAVING SERVICES	25,000.00	
	950-5112-0012	PROJECT OVERTIME		15,000.00
	950-5112-0048	OTHER PROJECT EXPENSES		5,000.00
	950-5112-0080	EMPLOYEE BENEFITS		5,000.00
		- TRANSFER FOR CAPITAL EXPENSES		

TOWN OF CARMEL
BUDGET REVISIONS NOVEMBER 2015 - #2015/06

ACCOUNT #	ACCOUNT DESCRIPTION	ORIGINAL BUDGET	ADJUSTED BUDGET	YTD ACTUAL EXPENDED	YTD UNEXPENDED BALANCE	YTD ENCUMBERED	YTD AVAILABLE BALANCE	BUDGET ADJUSTMENT	NET BUDGET BALANCE	BUDGET REVISION #
	GENERAL FUND									
100.1010.0010	TOWN BOARD PERSONAL SERVS	78,580.00	78,580.00	69,513.36	9,066.64	0.00	9,066.64		9,066.64	
100.1010.0011	TOWN BOARD STAFF PERS SVC	8,000.00	8,000.00	7,076.87	923.13	0.00	923.13		923.13	
100.1010.0016	TOWN BOARD RESERVE COMPENSATION	306,954.00	306,954.00	0.00	306,954.00	0.00	306,954.00		306,954.00	
100.1010.0040	TOWN BD CONTRACT EXPENSE	2,000.00	2,000.00	792.11	1,207.89	0.00	1,207.89		1,207.89	
100.1010.0041	TOWN BOARD EXPENSE-S.M.	1,000.00	1,000.00	0.00	1,000.00	0.00	1,000.00		1,000.00	
100.1010.0042	TOWN BOARD EXPENSE-J.L	1,000.00	1,000.00	0.00	1,000.00	0.00	1,000.00		1,000.00	
100.1010.0043	TOWN BOARD EXPENSE-J.S.	1,000.00	1,000.00	0.00	1,000.00	0.00	1,000.00		1,000.00	
100.1010.0044	TOWN BOARD EXPENSE F.L	1,000.00	1,000.00	0.00	1,000.00	0.00	1,000.00		1,000.00	
100.1010.0045	TOWN BOARD RECORDING SVCE	24,000.00	24,000.00	17,882.34	6,117.66	2,433.36	3,684.30		3,684.30	
100.1010.0046	BOARD CONSULTING SERVICES	10,000.00	10,000.00	0.00	10,000.00	0.00	10,000.00		10,000.00	
100.1010.0080	TN BOARD EMPLOYEE BENEFIT	105,000.00	105,000.00	95,344.36	9,655.64	0.00	9,655.64		9,655.64	
100.1010.0086	RETIREES HEALTH INSURANCE	16,000.00	16,000.00	14,547.12	1,452.88	0.00	1,452.88		1,452.88	
100.1110.0010	JUSTICE PERSONAL SERVICES	79,388.00	79,388.00	70,228.20	9,159.80	0.00	9,159.80		9,159.80	
100.1110.0011	JUSTICE STAFF PERS.SERVS	190,993.00	190,993.00	168,955.47	22,037.53	0.00	22,037.53		22,037.53	
100.1110.0012	JUSTICE COURT OVERTIME	16,000.00	16,000.00	11,115.80	4,884.20	0.00	4,884.20		4,884.20	
100.1110.0014	JUSTICE STAFF LONGEVITY	9,600.00	9,600.00	9,600.00	0.00	0.00	0.00		0.00	
100.1110.0019	JUSTICE COURT OTHER	2,500.00	2,500.00	2,500.00	0.00	0.00	0.00		0.00	
100.1110.0020	JUSTICE COURT EQUIPMENT	3,000.00	3,000.00	0.00	3,000.00	0.00	3,000.00		3,000.00	
100.1110.0040	JUSTICE OFFICE EXPENSE	6,000.00	6,055.92	5,979.81	76.11	63.70	12.41	1,000.00	1,012.41	2015/06
100.1110.0044	JUSTICE RECORDER SERVICES	1,000.00	1,000.00	179.50	820.50	0.00	820.50		820.50	
100.1110.0045	JUSTICE TICKET SERVICE	3,000.00	3,000.00	1,535.16	1,464.84	218.25	1,246.59		1,246.59	
100.1110.0046	JUSTICE INTERPRETING SERV	6,000.00	6,000.00	3,690.00	2,310.00	1,035.00	1,275.00		1,275.00	
100.1110.0047	JUST.TRAINING EXPENSES	3,000.00	3,000.00	2,461.52	538.48	0.00	538.48		538.48	
100.1110.0080	COURT EMPLOYEE BENEFITS	192,000.00	192,000.00	173,518.43	18,481.57	0.00	18,481.57		18,481.57	
100.1110.0086	RETIREES HEALTH INSURANCE	40,000.00	40,000.00	33,916.32	6,083.68	0.00	6,083.68	(1,000.00)	5,083.68	2015/06
100.1220.0010	SUPERVISOR PERS SERVICE	104,845.00	104,845.00	92,747.04	12,097.96	0.00	12,097.96		12,097.96	
100.1220.0011	SUPERVISOR STAFF PERS SVS	112,581.00	112,581.00	99,591.61	12,989.39	0.00	12,989.39		12,989.39	
100.1220.0013	SUPERVISOR-TEMP STAFF	1,000.00	1,000.00	901.68	98.32	0.00	98.32		98.32	
100.1220.0014	SUPERV.STAFF-LONGEVITY	4,400.00	4,400.00	4,400.00	0.00	0.00	0.00		0.00	
100.1220.0019	SUPERVISOR STAFF OTHER	5,000.00	5,000.00	5,000.00	0.00	0.00	0.00		0.00	
100.1220.0040	SUPERVISOR OFFICE EXPENSE	5,000.00	5,027.13	2,610.88	2,416.25	28.00	2,388.25		2,388.25	
100.1220.0047	SUPERVISOR'S SEMINAR EXP	1,600.00	1,600.00	150.00	1,450.00	0.00	1,450.00		1,450.00	
100.1220.0080	SUPRVISR EMPLOYEE BENEFIT	117,000.00	117,000.00	103,497.15	13,502.85	0.00	13,502.85		13,502.85	
100.1220.0086	RETIREES HEALTH INSURANCE	16,000.00	16,000.00	14,547.12	1,452.88	0.00	1,452.88		1,452.88	
100.1310.0040	FINANCIAL ADVISOR EXPENSE	2,000.00	2,500.00	2,500.00	0.00	0.00	0.00		0.00	
100.1315.0010	COMPTROLLER PERS SERVICE	96,942.00	96,942.00	85,756.19	11,185.81	0.00	11,185.81		11,185.81	
100.1315.0011	COMPTROLLER STAFF	90,697.00	90,697.00	80,231.82	10,465.18	0.00	10,465.18		10,465.18	
100.1315.0014	COMPTROLLER STF LONGEVITY	6,700.00	6,700.00	6,700.00	0.00	0.00	0.00		0.00	
100.1315.0019	COMPTROLLER OTHER	5,000.00	5,000.00	5,000.00	0.00	0.00	0.00		0.00	
100.1315.0040	COMPTROLLER OFFICE EXP	2,500.00	2,507.90	2,475.64	32.26	107.30	(75.04)	500.00	424.96	2015/06
100.1315.0045	COMPTROLLER MAINTENANCE CONTRACT	15,000.00	15,000.00	12,272.00	2,728.00	0.00	2,728.00		2,728.00	
100.1315.0047	COMPTROLLER CONFERENCES	1,500.00	1,500.00	1,006.54	493.46	0.00	493.46		493.46	
100.1315.0080	COMPTR EMPLOYEE BENEFITS	100,000.00	100,000.00	83,747.12	16,252.88	0.00	16,252.88		16,252.88	
100.1315.0086	RETIREES HEALTH INSURANCE	44,000.00	44,000.00	38,754.96	5,245.04	0.00	5,245.04	(500.00)	4,745.04	2015/06
100.1320.0040	AUDIT-CONTRACTUAL EXPENSE	69,600.00	69,600.00	69,600.00	0.00	0.00	0.00		0.00	
100.1320.0044	AUDIT SPECIAL EXPENSE	5,750.00	5,100.00	1,800.00	3,300.00	0.00	3,300.00		3,300.00	
100.1320.0049	AUDIT CAFR EXPENSES	6,500.00	6,650.00	6,625.50	24.50	0.00	24.50		24.50	
100.1330.0010	TAX RECEIVER PERS SERVICE	77,702.00	77,702.00	68,735.96	8,966.04	0.00	8,966.04		8,966.04	

TOWN OF CARMEL
BUDGET REVISIONS NOVEMBER 2015 - #2015/06

ACCOUNT #	ACCOUNT DESCRIPTION	ORIGINAL BUDGET	ADJUSTED BUDGET	YTD ACTUAL EXPENDED	YTD UNEXPENDED BALANCE	YTD ENCUMBERED	YTD AVAILABLE BALANCE	BUDGET ADJUSTMENT	NET BUDGET BALANCE	BUDGET REVISION #
100.1330.0011	TAX RECEIVER STAFF	93,773.00	88,773.00	73,338.24	15,434.76	0.00	15,434.76		15,434.76	
100.1330.0012	OVERTIME	0.00	400.00	378.81	21.19	0.00	21.19		21.19	
100.1330.0013	TAX RECEIVER TEMP STAFF	0.00	4,400.00	2,228.13	2,171.87	0.00	2,171.87		2,171.87	
100.1330.0014	TAX RECEIVER-LONGEVITY	2,300.00	2,300.00	2,300.00	0.00	0.00	0.00		0.00	
100.1330.0019	TAX RECEIVER OTHER COMP	0.00	0.00	2,591.67	(2,591.67)	0.00	(2,591.67)	2,591.67	0.00	BR#2
100.1330.0040	TAX REC OFFICE EXPENSE	2,000.00	2,231.08	1,899.09	331.99	275.00	56.99		56.99	
100.1330.0044	TAX REC.TECHNICAL SERVICE	4,650.00	4,650.00	3,570.00	1,080.00	0.00	1,080.00		1,080.00	
100.1330.0048	TAX RECEIVER POSTAGE EXP	15,000.00	15,000.00	9,812.23	5,187.77	0.00	5,187.77		5,187.77	
100.1330.0080	TAX RECEIVER EMP BENEFITS	128,000.00	128,000.00	110,086.45	17,913.55	0.00	17,913.55		17,913.55	
100.1330.0086	RETIREES HEALTH INSURANCE	16,000.00	16,000.00	12,161.76	3,838.24	0.00	3,838.24		3,838.24	
100.1340.0010	BUDGET OFFICER PERS SERVS	3,000.00	3,000.00	2,653.74	346.26	0.00	346.26		346.26	
100.1340.0040	BUDGET CONTRACTUAL EXP	200.00	200.00	182.90	17.10	0.00	17.10		17.10	
100.1340.0080	BUDGET EMPLOYEE BENEFITS	260.00	260.00	211.83	48.17	0.00	48.17		48.17	
100.1355.0010	ASSESSOR PERS SERVICE	93,645.00	93,645.00	82,840.02	10,804.98	0.00	10,804.98		10,804.98	
100.1355.0011	ASSESSOR STAFF	99,482.00	99,482.00	88,003.29	11,478.71	0.00	11,478.71		11,478.71	
100.1355.0012	ASSESSOR-STAFF OVER TIME	2,000.00	2,000.00	0.00	2,000.00	0.00	2,000.00		2,000.00	
100.1355.0013	ASSESSOR TEMPORARY STAFF	24,700.00	24,700.00	20,434.75	4,265.25	0.00	4,265.25		4,265.25	
100.1355.0014	ASSESSOR STAFF LONGEVITY	4,600.00	4,600.00	4,600.00	0.00	0.00	0.00		0.00	
100.1355.0040	ASSESSOR OFFICE EXPENSE	3,500.00	3,508.04	3,217.26	290.78	0.00	290.78		290.78	
100.1355.0042	ASSESSORS UTILITIES EXP	0.00	800.00	694.38	105.62	0.00	105.62		105.62	
100.1355.0044	ASSESSOR TECHNICAL SERV.	6,700.00	8,300.00	8,292.00	8.00	0.00	8.00		8.00	
100.1355.0045	ASSESSMENT BOARD SERVICES	1,000.00	1,000.00	800.00	200.00	0.00	200.00		200.00	
100.1355.0046	ASSESSOR CONTRACT SERVICE	150,000.00	413,598.00	337,905.64	75,692.36	0.00	75,692.36		75,692.36	
100.1355.0047	ASSESSOR TRAINING EXPENSE	1,500.00	1,500.00	1,281.10	218.90	0.00	218.90		218.90	
100.1355.0080	ASSESSOR EMPLOYEE BENEFIT	115,000.00	113,400.00	103,960.25	9,439.75	0.00	9,439.75		9,439.75	
100.1355.0086	RETIREES HEALTH INSURANCE	16,000.00	16,000.00	14,547.12	1,452.88	0.00	1,452.88		1,452.88	
100.1410.0010	TOWN CLERK PERSONAL SERVS	83,524.00	83,524.00	73,886.35	9,637.65	0.00	9,637.65		9,637.65	
100.1410.0011	TOWN CLERK STAFF	67,700.00	67,700.00	59,887.86	7,812.14	0.00	7,812.14		7,812.14	
100.1410.0013	TOWN CLERK TEMP STAFF	18,000.00	18,000.00	13,537.21	4,462.79	0.00	4,462.79		4,462.79	
100.1410.0014	TOWN CLK.STAFF LONGEVITY	2,500.00	2,500.00	2,500.00	0.00	0.00	0.00		0.00	
100.1410.0015	TOWN CLK DEPUTY STIPEND	2,000.00	2,000.00	846.12	1,153.88	0.00	1,153.88		1,153.88	
100.1410.0019	TOWN CLERK OTHER COMP	10,000.00	10,000.00	10,000.00	0.00	0.00	0.00		0.00	
100.1410.0040	TOWN CLK CONTRACT EXPENSE	4,750.00	4,748.45	4,779.40	(10.95)	0.00	(10.95)	300.00	289.05	BR#6
100.1410.0045	CLERK SYSTEM MAINTENANCE	1,615.00	1,615.00	1,615.00	0.00	0.00	0.00		0.00	
100.1410.0046	TOWN CODES PUBLICATIONS	3,500.00	3,500.00	1,195.00	2,305.00	0.00	2,305.00		2,305.00	
100.1410.0080	TN CLERK EMPLOYEE BENEFIT	64,000.00	64,000.00	66,376.96	(2,376.96)	0.00	(2,376.96)	4,000.00	1,623.04	BR#5
100.1410.0086	RETIREES HEALTH INSURANCE	37,000.00	37,000.00	32,674.08	4,325.92	0.00	4,325.92	(4,300.00)	25.92	BR#5&BR#6
100.1420.0040	TOWN LEGAL SERVICES CONT	95,000.00	95,000.00	94,999.92	0.08	0.00	0.08		0.08	
100.1420.0041	LITIGATION LEGAL SERVICES	30,000.00	30,000.00	10,287.75	19,712.25	0.00	19,712.25		19,712.25	
100.1420.0042	JUSTICE COURT PROSECUTION	42,000.00	42,000.00	40,423.25	1,576.75	0.00	1,576.75		1,576.75	
100.1420.0043	SPECIAL COUNSEL BOARDS	48,000.00	48,000.00	48,000.00	0.00	0.00	0.00		0.00	
100.1420.0044	LABOR LEGAL SERVICES	100,000.00	100,000.00	251,716.53	(151,716.53)	0.00	(151,716.53)	180,000.00	28,283.47	BR#1
100.1420.0045	DISTRICT LEGAL SERVICES	40,000.00	40,000.00	39,999.96	0.04	0.00	0.04		0.04	
100.1420.0046	BOND LEGAL SERVICES	2,000.00	2,000.00	0.00	2,000.00	0.00	2,000.00		2,000.00	
100.1420.0047	CERTIORARI LEGAL SERVICES	20,000.00	20,000.00	675.00	19,325.00	0.00	19,325.00		19,325.00	
100.1420.0048	DEFENSE LEGAL SERVICES	40,000.00	40,000.00	17,537.37	22,462.63	0.00	22,462.63		22,462.63	
100.1420.0049	LEGAL MISC. EXPENSE	5,000.00	5,000.00	2,362.54	2,637.46	0.00	2,637.46		2,637.46	
100.1440.0010	ENGINEER PERSONAL SERVICE	90,480.00	90,480.00	80,040.00	10,440.00	0.00	10,440.00		10,440.00	
100.1440.0011	ENGINEER STAFF	122,504.00	122,504.00	108,368.87	14,135.13	0.00	14,135.13		14,135.13	
100.1440.0012	ENGINEER STAFF OVERTIME	3,000.00	3,000.00	679.18	2,320.82	0.00	2,320.82		2,320.82	

TOWN OF CARMEL
BUDGET REVISIONS NOVEMBER 2015 - #2015/06

ACCOUNT #	ACCOUNT DESCRIPTION	ORIGINAL BUDGET	ADJUSTED BUDGET	YTD ACTUAL EXPENDED	YTD UNEXPENDED BALANCE	YTD ENCUMBERED	YTD AVAILABLE BALANCE	BUDGET ADJUSTMENT	NET BUDGET BALANCE	BUDGET REVISION #
100.1440.0013	ENGINEER TEMPORARY STAFF	8,000.00	8,000.00	6,302.58	1,697.42	0.00	1,697.42		1,697.42	
100.1440.0014	ENGINEER STAFF LONGEVITY	2,800.00	2,800.00	2,800.00	0.00	0.00	0.00		0.00	
100.1440.0017	ENGINEER CLOTHING ALLOW.	500.00	500.00	500.00	0.00	0.00	0.00		0.00	
100.1440.0040	ENGINEER OFFICE EXPENSES	5,000.00	6,500.00	3,250.65	3,249.35	910.90	2,338.45		2,338.45	
100.1440.0042	ENGINEER UTILITIES EXP	0.00	800.00	694.38	105.62	0.00	105.62		105.62	
100.1440.0045	ENGINEER EQUIPMENT MAINT	8,500.00	8,500.00	5,821.97	2,678.03	529.27	2,148.76		2,148.76	
100.1440.0046	ENGINEERING CONSULTANT	120,000.00	120,000.00	110,000.00	10,000.00	10,000.00	0.00		0.00	
100.1440.0047	ENGINEERING TRAINING EXP	1,200.00	1,700.00	1,354.78	345.22	0.00	345.22		345.22	
100.1440.0080	ENGINEER EMPLOYEE BENEFIT	132,500.00	132,500.00	121,725.50	10,774.50	0.00	10,774.50		10,774.50	
100.1440.0086	RETIREES HEALTH INSURANCE	22,200.00	20,200.00	17,401.42	2,798.58	0.00	2,798.58		2,798.58	
100.1460.0040	RECORDS MGMT CONTRACT EXP	1,000.00	1,000.00	0.00	1,000.00	0.00	1,000.00		1,000.00	
100.1460.0045	RECORDS STORAGE EXPENSE	3,000.00	3,000.00	2,593.54	406.46	0.00	406.46		406.46	
100.1460.0048	RECORDS MGMT MISC EXPENSE	1,500.00	1,500.00	835.86	664.14	0.00	664.14		664.14	
100.1470.0040	ETHICS BOARD CONTRACT EXP	200.00	200.00	0.00	200.00	0.00	200.00		200.00	
100.1610.0010	CENTRAL SERVS-PERS SERVS	73,212.00	73,212.00	64,764.78	8,447.22	0.00	8,447.22		8,447.22	
100.1610.0011	CENTRAL SERVICE STAFF	89,923.00	89,923.00	79,547.34	10,375.66	0.00	10,375.66		10,375.66	
100.1610.0013	CENTRAL SERV.-TEMP STAFF	3,000.00	4,000.00	3,311.40	688.60	0.00	688.60		688.60	
100.1610.0014	CENTRAL SERV.LONGEVITY	7,900.00	7,900.00	5,100.00	2,800.00	0.00	2,800.00		2,800.00	
100.1610.0040	CENTRAL SERVICE-CONT.EXP.	1,500.00	1,511.85	510.16	1,001.69	0.00	1,001.69		1,001.69	
100.1610.0044	CENTRAL SERVICE PAYROLL	40,000.00	40,000.00	26,582.81	13,417.19	0.00	13,417.19		13,417.19	
100.1610.0045	CENTRAL SVCE ADMIN CONTRT	20,000.00	20,000.00	14,606.82	5,393.18	2,500.00	2,893.18		2,893.18	
100.1610.0047	CENTRAL SERVICE CONF EXP	850.00	850.00	150.00	700.00	0.00	700.00		700.00	
100.1610.0080	CENT SERVICES EMP BENEFIT	90,000.00	90,000.00	78,566.65	11,433.35	0.00	11,433.35		11,433.35	
100.1610.0086	RETIREES HEALTH INSURANCE	16,000.00	15,000.00	12,161.76	2,838.24	0.00	2,838.24		2,838.24	
100.1620.0011	BLDG STAFF-PERS SERVICES	54,949.00	54,949.00	48,609.12	6,339.88	0.00	6,339.88		6,339.88	
100.1620.0012	BLDG STAFF OVERTIME	2,500.00	3,500.00	3,687.49	(187.49)	0.00	(187.49)	1,000.00	812.51	8885
100.1620.0013	BLDG TEMP.STAFF-UNDIST	8,000.00	14,500.00	12,336.99	2,163.01	0.00	2,163.01		2,163.01	
100.1620.0014	BLDG STAFF LONGEVITY	2,100.00	2,100.00	2,100.00	0.00	0.00	0.00		0.00	
100.1620.0017	BLDG STAFF CLOTHING ALLOW	500.00	500.00	500.00	0.00	0.00	0.00		0.00	
100.1620.0020	BLDG EQUIPMENT-UNDIST	1,000.00	1,000.00	0.00	1,000.00	0.00	1,000.00		1,000.00	
100.1620.0021	BUILDING MOTOR VEHICLES	6,000.00	6,000.00	2,608.53	3,391.47	182.33	3,209.14		3,209.14	
100.1620.0040	BLDG CONTR EXPENSE-UNDIST	30,000.00	30,003.95	22,596.23	7,407.72	2,282.05	5,125.67	(1,000.00)	4,125.67	8886
100.1620.0041	BUILDINGS HEATING FUEL	17,000.00	17,000.00	9,718.62	7,281.38	0.00	7,281.38		7,281.38	
100.1620.0042	BUILDINGS UTILITIES EXP	55,000.00	55,000.00	48,060.34	6,939.66	0.00	6,939.66		6,939.66	
100.1620.0043	BLDG ALARM/SECURITY SYS	15,000.00	15,000.00	14,629.95	370.05	0.00	370.05		370.05	
100.1620.0044	BLDG MAINTENANCE CONTRACT	5,850.00	5,850.00	5,100.00	750.00	0.00	750.00		750.00	
100.1620.0045	BUILDING SPEC.IMPROVEMENT	8,000.00	62,222.26	56,989.17	5,233.09	1,650.00	3,583.09		3,583.09	
100.1620.0046	BLDG CLEANING SUPPLIES	7,500.00	7,500.00	5,597.03	1,902.97	0.00	1,902.97		1,902.97	
100.1620.0047	BLDG REFUSE DISPOSAL EXP	2,000.00	2,000.00	1,584.00	416.00	0.00	416.00		416.00	
100.1620.0048	BUILDING CLEANING SVCES	9,468.00	9,468.00	7,890.00	1,578.00	1,578.00	0.00		0.00	
100.1620.0080	BUILDING EMPLOYEE BENEFIT	36,000.00	38,500.00	31,608.11	6,891.89	0.00	6,891.89	(1,000.00)	5,891.89	8885
100.1640.0011	CENTRAL GARAGE STAFF	65,732.00	65,732.00	57,167.68	8,564.32	0.00	8,564.32		8,564.32	
100.1640.0012	CENTRAL GARAGE OVER TIME	300.00	300.00	0.00	300.00	0.00	300.00		300.00	
100.1640.0017	CENTRAL GAR UNIFORM ALLOW	550.00	550.00	550.00	0.00	0.00	0.00		0.00	
100.1640.0018	CENTRAL GARAGE TOOL ALLOW	300.00	300.00	300.00	0.00	0.00	0.00		0.00	
100.1640.0020	CENTRAL GARAGE EQUIPMENT	5,000.00	5,000.00	3,803.77	1,196.23	116.66	1,079.57		1,079.57	
100.1640.0040	CENTRAL GARAGE CONTRAT EX	600.00	600.00	79.30	520.70	0.00	520.70		520.70	
100.1640.0049	CENTRAL GARAGE MISC EXP	150.00	150.00	0.00	150.00	0.00	150.00		150.00	
100.1640.0080	EMPLOYEE RETIREMENT	15,000.00	15,000.00	11,625.00	3,375.00	0.00	3,375.00		3,375.00	

TOWN OF CARMEL
BUDGET REVISIONS NOVEMBER 2015 - #2015/06

ACCOUNT #	ACCOUNT DESCRIPTION	ORIGINAL BUDGET	ADJUSTED BUDGET	YTD ACTUAL EXPENDED	YTD UNEXPENDED BALANCE	YTD ENCUMBERED	YTD AVAILABLE BALANCE	BUDGET ADJUSTMENT	NET BUDGET BALANCE	BUDGET REVISION #
100.1640.0082	SOCIAL SECURITY	5,800.00	5,800.00	3,986.12	1,813.88	0.00	1,813.88		1,813.88	
100.1640.0083	WORKMANS COMPENSATION	4,905.00	4,905.00	4,300.00	605.00	0.00	605.00		605.00	
100.1640.0084	HEALTH INSURANCE	22,200.00	22,200.00	21,706.32	493.68	0.00	493.68		493.68	
100.1640.0085	WELFARE FUND	1,050.00	1,050.00	1,050.00	0.00	0.00	0.00		0.00	
100.1670.0040	CENTRAL PRINTING EXPENSE	12,000.00	12,000.00	10,022.43	1,977.57	0.00	1,977.57		1,977.57	
100.1670.0045	CENTRAL ADVERTISING EXP	6,000.00	6,000.00	6,038.46	(38.46)	0.00	(38.46)	500.00	461.54	BR#6
100.1680.0020	INFORMATION TECH EQUIP	33,000.00	59,100.00	45,345.52	13,754.48	0.00	13,754.48		13,754.48	
100.1680.0021	DATA IMAGING EQUIPMENT	10,000.00	25,000.00	0.00	25,000.00	0.00	25,000.00		25,000.00	
100.1680.0040	INFORMATION TECH CONT EX	12,000.00	7,670.00	3,350.00	4,320.00	0.00	4,320.00	(500.00)	3,820.00	BR#6
100.1680.0041	INFORMATION TECH SUPPLIES	8,000.00	8,000.00	2,899.10	5,100.90	1,544.89	3,556.01		3,556.01	
100.1680.0042	INFORM TECH WEB SITE EXP	8,000.00	11,850.00	11,804.88	45.12	0.00	45.12		45.12	
100.1680.0044	INFORM TECH CONSULTING	41,500.00	48,525.00	35,762.50	12,762.50	0.00	12,762.50		12,762.50	
100.1681.0040	GIS CONTRACTUAL EXPENSE	1,000.00	1,000.00	0.00	1,000.00	0.00	1,000.00		1,000.00	
100.1910.0041	INSURANCE CLAIMS EXPENSE	5,000.00	5,000.00	818.80	4,181.20	0.00	4,181.20		4,181.20	
100.1920.0040	MUNICIPAL ASSN DUES	1,650.00	1,650.00	1,650.00	0.00	0.00	0.00		0.00	
100.1930.0040	CERTIORARI SETTLEMENTS	10,000.00	133,000.00	134,657.35	(1,657.35)	0.00	(1,657.35)	1,800.00	147.65	BR#4
100.1950.0040	TAXES & ASSESSMENTS	33,000.00	33,000.00	31,911.20	1,088.80	0.00	1,088.80		1,088.80	
100.1970.0040	OFFICE SUPPLIES UNDIST	6,000.00	6,000.00	5,582.81	417.19	531.67	(114.48)	1,000.00	885.52	BR#6
100.1989.0040	UNCLASSIFIED EXPENDITURE	5,000.00	10,370.00	8,428.89	1,941.11	1,572.50	368.61		368.61	
100.1990.0040	CONTINGENT ACCOUNT	50,000.00	18,075.00	0.00	18,075.00	0.00	18,075.00		18,075.00	
100.3120.0010	POLICE PERS SVS-NON UNIFM	362,440.00	362,440.00	314,895.30	47,544.70	0.00	47,544.70	(10,000.00)	37,544.70	BR#7
100.3120.0011	POLICE PERS SVS-UNIFORM	3,100,791.00	2,930,591.00	2,589,455.11	341,135.89	0.00	341,135.89	(8,500.00)	332,635.89	BR#3
100.3120.0012	POLICE STAFF OVERTIME	440,000.00	590,000.00	654,303.50	(64,303.50)	0.00	(64,303.50)	145,000.00	80,696.50	BR#7
100.3120.0013	POLICE TEMP STAFF-JAIL	25,000.00	25,000.00	4,053.14	20,946.86	0.00	20,946.86	(20,000.00)	946.86	BR#7
100.3120.0014	POLICE STAFF LONGEVITY	69,475.00	69,475.00	66,850.00	2,625.00	0.00	2,625.00		2,625.00	
100.3120.0015	POLICE EDUCATION STIPENDS	29,000.00	28,350.00	16,700.00	11,650.00	0.00	11,650.00		11,650.00	
100.3120.0016	POLICE STAFF HOLIDAY COMP	208,332.00	209,332.00	6,317.91	202,014.09	0.00	202,014.09	(40,000.00)	162,014.09	BR#7
100.3120.0017	POLICE UNIFORM ALLOWANCE	4,550.00	5,200.00	5,200.00	0.00	0.00	0.00		0.00	
100.3120.0018	POLICE NIGHT DIFFERENTIAL	36,124.00	36,124.00	26,688.37	9,435.63	0.00	9,435.63		9,435.63	
100.3120.0019	POLICE COMPENSATED ABS	162,500.00	225,000.00	150,364.14	74,635.86	0.00	74,635.86		74,635.86	
100.3120.0020	POLICE UNIFORMS	15,000.00	15,000.00	10,305.95	4,694.05	757.49	3,936.56		3,936.56	
100.3120.0021	POLICE MOTOR VEHICLES	110,000.00	113,000.00	112,937.61	62.39	0.00	62.39	35,795.00	35,857.39	BR#3
100.3120.0024	POLICE ACCIDENT REPAIRS	3,000.00	9,402.00	9,401.96	0.04	0.00	0.04		0.04	
100.3120.0027	POLICE OTHER EQUIPMENT	37,000.00	49,350.00	44,067.07	5,282.93	257.45	5,025.48		5,025.48	
100.3120.0040	POLICE-CONTRACT EXPENSES	25,000.00	25,078.00	23,802.50	1,275.50	888.45	388.05	10,000.00	10,388.05	BR#8
100.3120.0041	POLICE MOTOR VEHICLE FUEL	110,000.00	110,000.00	53,213.65	56,786.35	0.00	56,786.35	(10,000.00)	46,786.35	BR#2
100.3120.0042	POLICE OFFICE UTILITIES EXP	20,000.00	20,000.00	15,811.38	4,188.62	0.00	4,188.62		4,188.62	
100.3120.0043	POLICE INSURANCE COVERAGE	135,000.00	135,000.00	128,829.53	6,170.47	0.00	6,170.47		6,170.47	
100.3120.0045	POLICE VEHICLE MAINT	90,000.00	90,254.28	83,558.88	6,695.40	2,091.58	4,603.82		4,603.82	
100.3120.0046	POLICE RENTALS/LEASES	50,000.00	70,200.00	68,658.51	1,541.49	1,538.03	3.46	2,300.00	2,303.46	BR#8
100.3120.0047	POLICE CONFERENCE/TRAIN	15,347.00	15,347.00	7,037.59	8,309.41	1,905.09	6,404.32		6,404.32	
100.3120.0048	POLICE DARE PROGRAM	8,000.00	8,000.00	6,656.33	1,343.67	191.00	1,152.67		1,152.67	
100.3120.0049	POLICE UNIFORM CLEAN/REP	6,200.00	6,200.00	2,432.00	3,768.00	303.50	3,464.50		3,464.50	
100.3120.0080	POLICE NON UNIFORM RETIRE	80,000.00	80,000.00	63,750.00	16,250.00	0.00	16,250.00	(10,000.00)	6,250.00	BR#7
100.3120.0081	POLICE RETIREMENT UNIFORM	1,120,000.00	1,120,000.00	1,041,227.50	78,772.50	0.00	78,772.50	(15,000.00)	63,772.50	BR#7
100.3120.0082	POLICE SOCIAL SECURITY	380,000.00	380,000.00	271,853.34	108,146.66	0.00	108,146.66		108,146.66	
100.3120.0083	POLICE WORKMANS COMP	165,000.00	165,000.00	146,271.00	18,729.00	0.00	18,729.00	(15,000.00)	3,729.00	BR#7
100.3120.0084	POLICE HEALTH INSURANCE	775,000.00	775,000.00	745,253.38	29,746.62	0.00	29,746.62	(27,300.00)	2,446.62	BR#7&BR#8

TOWN OF CARMEL
BUDGET REVISIONS NOVEMBER 2015 - #2015/06

ACCOUNT #	ACCOUNT DESCRIPTION	ORIGINAL BUDGET	ADJUSTED BUDGET	YTD ACTUAL EXPENDED	YTD UNEXPENDED BALANCE	YTD ENCUMBERED	YTD AVAILABLE BALANCE	BUDGET ADJUSTMENT	NET BUDGET BALANCE	BUDGET REVISION #
100.3120.0085	POLICE-OPTICAL & DENTAL	75,000.00	75,000.00	49,008.52	25,991.48	0.00	25,991.48		25,991.48	
100.3120.0086	RETIREES HEALTH INSURANCE	675,000.00	675,000.00	660,634.35	14,365.65	0.00	14,365.65	(10,000.00)	4,365.65	2015/7
100.3120.0087	POLICE CIVILIAN DISAB INS	735.00	735.00	0.00	735.00	0.00	735.00		735.00	
100.3120.0089	POLICE MEDICAL PHYSICALS	300.00	300.00	0.00	300.00	0.00	300.00		300.00	
100.3120.0090	MCT MOBILITY TAX	16,475.00	16,475.00	12,757.22	3,717.78	0.00	3,717.78		3,717.78	
100.3122.0040	BICYCLE PATROL EXPENSES	1,000.00	0.00	0.00	0.00	0.00	0.00		0.00	
100.3123.0012	COMMUNITY POLICE OVERTIME	3,000.00	3,000.00	3,000.00	0.00	0.00	0.00		0.00	
100.3123.0040	COMMUNITY POLICE EXPENSES	1,000.00	0.00	0.00	0.00	0.00	0.00		0.00	
100.3123.0081	POLICE RETIREMENT	1,150.00	1,150.00	1,112.50	37.50	0.00	37.50		37.50	
100.3123.0082	SOCIAL SECURITY	306.00	306.00	0.00	306.00	0.00	306.00		306.00	
100.3124.0011	POLICE K-9 STAFF	7,800.00	7,800.00	6,037.50	1,762.50	0.00	1,762.50		1,762.50	
100.3124.0012	POLICE K-9 OVERTIME	9,000.00	9,000.00	7,413.36	1,586.64	0.00	1,586.64	(100.00)	1,486.64	2015/8
100.3124.0040	POLICE K-9 EXPENSES	1,000.00	1,000.00	449.96	550.04	513.90	36.14		36.14	
100.3124.0081	POLICE RETIREMENT	4,000.00	4,000.00	4,000.00	0.00	0.00	0.00		0.00	
100.3124.0082	SOCIAL SECURITY	1,150.00	1,150.00	1,113.55	36.45	0.00	36.45	100.00	136.45	2015/8
100.3310.0011	SIGN CONTROL PERSONAL SER	65,732.00	65,732.00	57,167.68	8,564.32	0.00	8,564.32		8,564.32	
100.3310.0012	SIGN CONTROL OVER TIME	4,000.00	5,000.00	4,427.39	572.61	0.00	572.61		572.61	
100.3310.0014	SIGN CONTROL LONGEVITY	3,117.00	3,117.00	3,117.00	0.00	0.00	0.00		0.00	
100.3310.0017	SIGN CONTROL UNIFORM ALL	550.00	550.00	550.00	0.00	0.00	0.00		0.00	
100.3310.0020	SIGNS EQUIPMENT EXPENSE	5,000.00	5,000.00	970.53	4,029.47	0.00	4,029.47		4,029.47	
100.3310.0040	SIGNS CONTRACTUAL EXPENSE	15,000.00	14,000.00	7,067.34	6,932.66	750.00	6,182.66		6,182.66	
100.3310.0045	SIGN STREET LINES	30,000.00	30,000.00	14,647.87	15,352.13	0.00	15,352.13		15,352.13	
100.3310.0048	SIGN MISC.EXPENSE	200.00	200.00	0.00	200.00	0.00	200.00		200.00	
100.3310.0080	EMPLOYEE RETIREMENT	16,500.00	16,500.00	12,875.00	3,625.00	0.00	3,625.00		3,625.00	
100.3310.0082	SOCIAL SECURITY	6,250.00	6,250.00	4,905.41	1,344.59	0.00	1,344.59		1,344.59	
100.3310.0083	WORKMANS COMPENSATION	4,705.00	4,705.00	4,100.00	605.00	0.00	605.00		605.00	
100.3310.0084	HEALTH INSURANCE	22,200.00	22,200.00	21,706.32	493.68	0.00	493.68		493.68	
100.3310.0085	WELFARE FUND	1,050.00	1,050.00	1,050.00	0.00	0.00	0.00		0.00	
100.3510.0011	DOG CONTROL	27,000.00	27,000.00	23,884.58	3,115.42	0.00	3,115.42		3,115.42	
100.3510.0013	DOG CONTROL PART TIME STF	2,000.00	2,000.00	1,769.16	230.84	0.00	230.84		230.84	
100.3510.0040	DOG CONTROL CONTRACT	50,635.00	50,635.00	50,635.00	0.00	0.00	0.00		0.00	
100.3510.0045	DOG CONTROL SPEC. EXPENSE	200.00	200.00	0.00	200.00	0.00	200.00		200.00	
100.3510.0046	SPCA CONTRACT EXPENSE	5,000.00	5,000.00	5,000.00	0.00	0.00	0.00		0.00	
100.3510.0080	DOG CNTRL EMPLOYEE BENEFT	8,250.00	8,250.00	6,499.76	1,750.24	0.00	1,750.24		1,750.24	
100.3620.0010	CODE ENFORCER PERS SERVS	85,986.00	85,986.00	76,064.22	9,921.78	0.00	9,921.78		9,921.78	
100.3620.0011	CODE ENFORSEMENT-STAFF	98,796.00	98,796.00	87,402.87	11,393.13	0.00	11,393.13		11,393.13	
100.3620.0012	CODE ENFORCE-STAFF O.T	10,000.00	10,000.00	6,420.04	3,579.96	0.00	3,579.96		3,579.96	
100.3620.0013	CODE ENF TEMPORARY STAFF	40,000.00	40,000.00	31,950.26	8,049.74	0.00	8,049.74		8,049.74	
100.3620.0014	CODE ENF STAFF LONGEVITY	5,600.00	5,600.00	5,600.00	0.00	0.00	0.00		0.00	
100.3620.0040	CODES CONTRACTUAL EXPENSE	5,000.00	5,054.32	4,707.77	346.55	0.00	346.55		346.55	
100.3620.0041	BUILDING ALARM POSTAGE	2,000.00	2,000.00	1,329.64	670.36	0.00	670.36		670.36	
100.3620.0042	CODES DEPT UTILITIES EXP	0.00	1,200.00	1,041.53	158.47	0.00	158.47		158.47	
100.3620.0045	CODES SYSTEM MAINTENANCE	2,720.00	0.00	0.00	0.00	0.00	0.00		0.00	
100.3620.0047	CODE ENFORCEMENT TRAINING	550.00	550.00	300.00	250.00	0.00	250.00		250.00	
100.3620.0080	CODES ENFORCMNT EMP BENFT	130,000.00	130,000.00	115,353.60	14,646.40	0.00	14,646.40		14,646.40	
100.3620.0086	RETIREES HEALTH INSURANCE	16,000.00	16,000.00	10,024.60	5,975.40	0.00	5,975.40		5,975.40	
100.3650.0040	BUILDING DEMO EXPENSE	0.00	4,226.00	4,226.00	0.00	0.00	0.00		0.00	
100.4020.0011	VITAL STAT PERS.SERVICES	10,000.00	10,000.00	8,846.26	1,153.74	0.00	1,153.74		1,153.74	
100.4020.0015	VITAL STATISTICS STIPEND	4,435.00	4,435.00	3,923.34	511.66	0.00	511.66		511.66	

TOWN OF CARMEL
BUDGET REVISIONS NOVEMBER 2015 - #2015/06

ACCOUNT #	ACCOUNT DESCRIPTION	ORIGINAL BUDGET	ADJUSTED BUDGET	YTD ACTUAL EXPENDED	YTD UNEXPENDED BALANCE	YTD ENCUMBERED	YTD AVAILABLE BALANCE	BUDGET ADJUSTMENT	NET BUDGET BALANCE	BUDGET REVISION #
100.4020.0080	VITAL STATS EMP BENEFITS	4,260.00	4,260.00	3,045.51	1,214.49	0.00	1,214.49		1,214.49	
100.5010.0010	HWY SUPT PERSONAL SERVS	107,999.00	107,999.00	95,537.40	12,461.60	0.00	12,461.60		12,461.60	
100.5010.0011	HWY ADMIN STAFF COMP	188,321.00	188,321.00	166,591.30	21,729.70	0.00	21,729.70		21,729.70	
100.5010.0014	HIGHWAY ADMIN LONGEVITY	7,100.00	7,100.00	7,100.00	0.00	0.00	0.00		0.00	
100.5010.0040	HIGHWAY ADMIN CONTRCT EXP	2,000.00	2,063.20	1,113.37	949.83	145.00	804.83		804.83	
100.5010.0042	HIGHWAY ADMIN UTILITIES EXP	0.00	400.00	347.19	52.81	0.00	52.81		52.81	
100.5010.0046	HIGHWAY ADMIN CONTRACTS	1,675.00	1,675.00	1,579.61	95.39	89.51	5.88		5.88	
100.5010.0047	HIGHWAY ADMIN TRAIN EXPNS	2,000.00	2,000.00	1,037.19	962.81	0.00	962.81		962.81	
100.5010.0080	HIGHWAY ADMIN EMP BENEFIT	165,000.00	155,000.00	133,937.83	21,062.17	0.00	21,062.17		21,062.17	
100.5010.0086	RETIREES HEALTH INSRUANCE	25,000.00	25,000.00	20,628.00	4,372.00	0.00	4,372.00		4,372.00	
100.5132.0020	HIGHWAY GARAGE EQUIPMENT	5,000.00	5,000.00	506.15	4,493.85	0.00	4,493.85		4,493.85	
100.5132.0021	HIGHWAY GARAGE SPEC EXPEN	2,500.00	2,500.00	362.50	2,137.50	50.00	2,087.50		2,087.50	
100.5132.0040	HIGHWAY GARAGE CONT EXP.	18,000.00	23,000.00	20,540.11	2,459.89	684.70	1,775.19		1,775.19	
100.5132.0041	HIGHWAY GARAGE HEATING EX	13,000.00	13,000.00	9,192.03	3,807.97	0.00	3,807.97		3,807.97	
100.5132.0042	HIGHWAY GARAGE UTILITIES EXP	18,000.00	23,000.00	19,429.75	3,570.25	0.00	3,570.25		3,570.25	
100.5132.0044	HIGHWAY GARAGE PROP LEASE	30,000.00	30,000.00	0.00	30,000.00	0.00	30,000.00		30,000.00	
100.5132.0045	HIGHWAY BUILDING CLEANING	2,744.00	2,744.00	2,286.50	457.50	457.30	0.20		0.20	
100.5132.0046	HIGHWAY GARAGE ALARM	4,740.00	4,740.00	4,740.00	0.00	0.00	0.00		0.00	
100.5132.0047	HIGHWAY REFUSE DISPOSAL	2,495.00	2,495.00	2,145.00	350.00	0.00	350.00		350.00	
100.5182.0040	STREET LIGHTING UTILITIES	15,000.00	15,000.00	10,779.83	4,220.17	0.00	4,220.17		4,220.17	
100.7020.0010	REC.ADMIN PERSONAL SERVS	95,519.00	95,519.00	84,497.40	11,021.60	0.00	11,021.60		11,021.60	
100.7020.0011	REC.ADMIN STAFF	134,818.00	112,818.00	97,310.81	15,507.19	0.00	15,507.19		15,507.19	
100.7020.0013	REC ADMIN TEMPORARY STAFF	15,000.00	18,000.00	15,654.96	2,345.04	0.00	2,345.04		2,345.04	
100.7020.0014	REC ADM STAFF LONGEVITY	6,700.00	6,700.00	4,400.00	2,300.00	0.00	2,300.00		2,300.00	
100.7020.0019	REC STAFF PAID ABSENCES	0.00	0.00	6,470.75	(6,470.75)	0.00	(6,470.75)	6,470.75	0.00	BR#2
100.7020.0020	REC ADM OFFICE EQUIPMENT	1,000.00	2,000.00	1,169.59	830.41	0.00	830.41	(500.00)	330.41	BR#10
100.7020.0040	REC ADM CONTRACTUAL EXP	8,000.00	8,000.00	7,772.77	227.23	319.26	(92.03)	1,000.00	907.97	BR#10
100.7020.0041	REC ADMIN VEHICLE FUELS	1,500.00	1,500.00	448.09	1,051.91	0.00	1,051.91		1,051.91	
100.7020.0042	RECREATION UTILITIES	17,000.00	17,000.00	14,966.62	2,033.38	85.61	1,947.77		1,947.77	
100.7020.0043	BLDG ALARM CONTRACTS	1,248.00	1,248.00	1,100.00	148.00	0.00	148.00		148.00	
100.7020.0044	REC BLDG CONCESSION EXP	3,500.00	3,500.00	2,700.00	800.00	0.00	800.00	(500.00)	300.00	BR#10
100.7020.0045	REC BLDG.SPECIAL REPAIRS	7,000.00	37,500.00	8,012.00	29,488.00	0.00	29,488.00	17,400.00	46,888.00	BR#9
100.7020.0047	RECREATION STAFF TRAINING	500.00	500.00	125.00	375.00	0.00	375.00		375.00	
100.7020.0048	RECREATION PUBLICATION EX	11,000.00	10,500.00	10,064.71	435.29	0.00	435.29		435.29	
100.7020.0080	REC ADMIN EMPLOYE BENEFIT	162,000.00	147,000.00	123,828.97	23,171.03	0.00	23,171.03		23,171.03	
100.7020.0086	RETIREES HEALTH INSURANCE	23,000.00	23,000.00	20,628.00	2,372.00	0.00	2,372.00		2,372.00	
100.7110.0011	PARK MAINTAINENCE STAFF	99,476.00	99,476.00	87,998.00	11,478.00	0.00	11,478.00		11,478.00	
100.7110.0013	PARK MAINT TEMP STAFF	20,000.00	23,000.00	20,709.60	2,290.40	0.00	2,290.40		2,290.40	
100.7110.0014	PARK MAINT STAFF LONG.	5,100.00	5,100.00	5,100.00	0.00	0.00	0.00		0.00	
100.7110.0017	PARK STAFF UNIFORM ALLOW	1,000.00	1,000.00	1,000.00	0.00	0.00	0.00		0.00	
100.7110.0020	PARK MAINTAINENCE EQUIP	5,000.00	0.00	0.00	0.00	0.00	0.00		0.00	
100.7110.0040	PARK CONTRACTUAL EXPENSE	30,000.00	40,000.00	34,825.58	5,174.42	2,837.57	2,336.85		2,336.85	
100.7110.0041	PARK & MAINTAINENCE FUELS	5,000.00	5,000.00	3,338.16	1,661.84	0.00	1,661.84		1,661.84	
100.7110.0042	PARK OUT BLDG.UTILITIES	1,500.00	2,000.00	1,576.01	423.99	0.00	423.99		423.99	
100.7110.0045	PARK MAINTENANCE CONTRACT	43,000.00	39,000.00	36,553.25	2,446.75	0.00	2,446.75	(2,400.00)	46.75	BR#9
100.7110.0046	PARK FACILITY LEASES	95,000.00	95,000.00	90,000.00	5,000.00	0.00	5,000.00	(5,000.00)	0.00	BR#9
100.7110.0047	PARK REFUSE DISPOSAL	3,500.00	3,500.00	2,723.20	776.80	0.00	776.80		776.80	
100.7110.0080	PARK EMPLOYEE BENEFITS	102,500.00	102,500.00	92,226.23	10,273.77	0.00	10,273.77		10,273.77	
100.7110.0086	RETIREES HEALTH INSURANCE	9,800.00	9,800.00	5,355.34	4,444.66	0.00	4,444.66		4,444.66	
100.7111.0020	SYCAMORE BALLFIELD EQUIP	1,000.00	0.00	0.00	0.00	0.00	0.00		0.00	

TOWN OF CARMEL
BUDGET REVISIONS NOVEMBER 2015 - #2015/06

ACCOUNT #	ACCOUNT DESCRIPTION	ORIGINAL BUDGET	ADJUSTED BUDGET	YTD ACTUAL EXPENDED	YTD UNEXPENDED BALANCE	YTD ENCUMBERED	YTD AVAILABLE BALANCE	BUDGET ADJUSTMENT	NET BUDGET BALANCE	BUDGET REVISION #
100.7111.0040	SYCAMORE FIELD CONT EXP	21,500.00	21,500.00	184.98	21,315.02	18,747.60	2,567.42		2,567.42	
100.7112.0020	MCDONOUGH FIELDS EQUIPMENT	1,000.00	1,000.00	824.00	176.00	0.00	176.00		176.00	
100.7112.0040	MCDONOUGH FIELDS CONTRACT EXP	6,200.00	6,200.00	6,040.32	159.68	139.76	19.92		19.92	
100.7112.0041	MCDONOUGH RD SKATE PARK	500.00	500.00	0.00	500.00	0.00	500.00	(500.00)	0.00	BR#10
100.7112.0042	MCDONOUGH FIELDS UTILITIES	10,000.00	10,000.00	10,172.83	(172.83)	0.00	(172.83)	500.00	327.17	BR#10
100.7113.0020	CHAMBER PARK IMPROVEMENTS	0.00	50,000.00	33,225.87	16,774.13	1,000.00	15,774.13		15,774.13	
100.7113.0040	CHAMBER PARK CONTRACT EXP	3,000.00	3,000.00	2,269.50	730.50	229.00	501.50		501.50	
100.7114.0040	RED MILLS CONTRACT EXPENS	4,500.00	3,000.00	2,984.00	16.00	0.00	16.00		16.00	
100.7114.0042	RED MILLS PARK - UTILITIES	500.00	500.00	188.23	311.77	0.00	311.77		311.77	
100.7115.0040	AIRPORT PK CONTRACT EXPNS	1,000.00	1,000.00	453.00	547.00	24.40	522.60		522.60	
100.7116.0040	VOLZ PARK CONTRACT EXPNSE	200.00	200.00	0.00	200.00	0.00	200.00		200.00	
100.7117.0020	CARMADA PARK EQUIPMENT	1,000.00	0.00	0.00	0.00	0.00	0.00		0.00	
100.7117.0040	CARMADA PARK CONT EXPENSE	4,000.00	56,174.94	5,727.98	50,446.96	41,412.08	9,034.88		9,034.88	
100.7117.0042	CARMARDA PARK UTILITIES	1,000.00	1,000.00	0.00	1,000.00	0.00	1,000.00		1,000.00	
100.7118.0020	BALDWIN MEADOW EQUIPMENT	500.00	500.00	76.00	424.00	0.00	424.00		424.00	
100.7118.0040	BALDWIN MEADOW CONT EXPNS	8,000.00	12,500.00	12,078.38	421.62	256.80	164.82	(150.00)	14.82	BR#10
100.7118.0042	BALDWIN MEADOW UTILITIES	3,500.00	2,500.00	2,510.89	(10.89)	0.00	(10.89)	150.00	139.11	BR#10
100.7119.0040	DOG PARK CONT EXPENSE	1,500.00	1,500.00	1,130.00	370.00	384.00	(14.00)	20.00	6.00	BR#10
100.7140.0013	PLAYGROUND+REC TEMP STAFF	121,000.00	101,000.00	90,759.69	10,240.31	0.00	10,240.31	(10,000.00)	240.31	BR#9
100.7140.0020	PLAYGROUND EQUIPMENT	1,000.00	0.00	0.00	0.00	0.00	0.00		0.00	
100.7140.0040	PLAYGROUND CONT EXPENSE	3,000.00	3,000.00	2,906.77	93.23	0.00	93.23		93.23	
100.7140.0080	PLAYGRD EMPLOYEE BENEFITS	11,500.00	11,500.00	8,801.31	2,698.69	0.00	2,698.69		2,698.69	
100.7180.0013	BEACH TEMPORARY STAFF	50,000.00	38,000.00	37,759.81	240.19	0.00	240.19		240.19	
100.7180.0020	BEACH EQUIPMENT	500.00	2,500.00	145.59	2,354.41	2,145.00	209.41	(20.00)	189.41	BR#10
100.7180.0040	BEACH CONTRACTUAL EXPENSE	3,000.00	3,000.00	1,461.11	1,538.89	0.00	1,538.89		1,538.89	
100.7180.0042	BEACH UTILITIES EXPENSE	950.00	950.00	928.43	21.57	0.00	21.57		21.57	
100.7180.0080	BEACH EMPLOYEE BENEFITS	5,500.00	5,500.00	4,342.12	1,157.88	0.00	1,157.88		1,157.88	
100.7190.0020	SKATING RINK EQUIPMENT	500.00	500.00	419.98	80.02	0.00	80.02		80.02	
100.7190.0040	SKATING RINK CONT EXPENSE	4,000.00	11,000.00	6,459.28	4,540.72	4,114.40	426.32		426.32	
100.7190.0042	SKATING RINK UTILITIES EXP	1,000.00	1,000.00	556.62	443.38	0.00	443.38		443.38	
100.7190.0046	EQUIPMENT/LEASE RENTALS	700.00	700.00	294.00	406.00	0.00	406.00		406.00	
100.7190.0048	SKATING RINK OTHER EXPEN	500.00	500.00	0.00	500.00	0.00	500.00		500.00	
100.7190.0080	PARK OTHER EMPLOY BENEFIT	300.00	300.00	0.00	300.00	0.00	300.00		300.00	
100.7270.0040	CONCERT SERIES CONT.EXP	7,000.00	7,000.00	6,995.00	5.00	0.00	5.00		5.00	
100.7310.0013	YOUTH PROGRAM TEMP STAFF	3,000.00	3,000.00	2,121.99	878.01	0.00	878.01		878.01	
100.7310.0040	YOUTH CONTRACTUAL EXPENSE	15,000.00	15,000.00	8,861.54	6,138.46	138.95	5,999.51		5,999.51	
100.7310.0045	YOUTH SELF SUSTAIN PROGRM	70,000.00	70,000.00	61,595.47	8,404.53	5,382.00	3,022.53		3,022.53	
100.7310.0046	YOUTH SVCE CONTRACTS	45,000.00	45,000.00	45,000.00	0.00	0.00	0.00		0.00	
100.7410.0040	LIBRARY CONTRACT-MAHOPAC	50,000.00	50,000.00	50,000.00	0.00	0.00	0.00		0.00	
100.7410.0041	LIBRARY CONTRACT-REED MEM	15,000.00	15,000.00	15,000.00	0.00	0.00	0.00		0.00	
100.7450.0040	MUSEUM CONTRACT EXPENSE	1,000.00	1,000.00	0.00	1,000.00	0.00	1,000.00		1,000.00	
100.7450.0042	MUSEUM UTILITIES EXP	4,500.00	4,500.00	3,671.14	828.86	0.00	828.86		828.86	
100.7450.0043	MUSEUM ALARM EXPENSE	1,000.00	1,000.00	822.00	178.00	0.00	178.00		178.00	
100.7510.0040	TWN.HISTORIAN CONTRACTUAL	1,000.00	1,000.00	761.33	238.67	0.00	238.67		238.67	
100.7550.0040	CELEBRATION CONTRACTUAL	2,500.00	2,500.00	1,313.91	1,186.09	0.00	1,186.09		1,186.09	
100.7610.0013	PROG.FOR AGING TEMP STAFF	1,800.00	1,800.00	900.00	900.00	0.00	900.00		900.00	
100.7610.0040	PROG FOR AGING CONT EXP	28,000.00	30,000.00	27,175.91	2,824.09	100.00	2,724.09		2,724.09	
100.7610.0041	OUTREACH PROGRAM FOR AGING	5,000.00	5,000.00	5,000.00	0.00	0.00	0.00		0.00	
100.7610.0080	EMPLOYEE BENEFITS	120.00	120.00	83.93	36.07	0.00	36.07		36.07	

TOWN OF CARMEL
BUDGET REVISIONS NOVEMBER 2015 - #2015/06

ACCOUNT #	ACCOUNT DESCRIPTION	ORIGINAL BUDGET	ADJUSTED BUDGET	YTD ACTUAL EXPENDED	YTD UNEXPENDED BALANCE	YTD ENCUMBERED	YTD AVAILABLE BALANCE	BUDGET ADJUSTMENT	NET BUDGET BALANCE	BUDGET REVISION #
100.8010.0010	ZONING BOARD PERSONAL SVS	15,067.00	15,067.00	12,935.52	2,131.48	0.00	2,131.48		2,131.48	
100.8010.0040	ZONING CONTRACT EXPENSE	700.00	700.00	681.46	18.54	0.00	18.54	200.00	218.54	8886
100.8010.0080	ZONING BRD EMP BENEFITS	1,500.00	1,500.00	1,125.10	374.90	0.00	374.90	(200.00)	174.90	8886
100.8020.0010	PLANNING BOARD PERS.SERVS	19,441.00	19,441.00	16,356.42	3,084.58	0.00	3,084.58		3,084.58	
100.8020.0013	PLANNING TEMPORARY STAFF	27,000.00	27,000.00	22,951.41	4,048.59	0.00	4,048.59		4,048.59	
100.8020.0040	PLANNING CONTRACTUAL EXP	1,250.00	1,257.90	1,046.10	211.80	202.98	8.82	100.00	108.82	8886
100.8020.0044	PLANNING SPECIAL SERVICES	10,000.00	13,891.93	0.00	13,891.93	3,891.93	10,000.00		10,000.00	
100.8020.0045	PLANNING CONSULTANT	70,000.00	70,000.00	58,333.30	11,666.70	0.00	11,666.70		11,666.70	
100.8020.0047	TRAINING EXPENSES	500.00	500.00	200.00	300.00	0.00	300.00		300.00	
100.8020.0080	PLANNING BRD EMP BENEFITS	4,600.00	4,600.00	3,603.54	996.46	0.00	996.46	(100.00)	896.46	8886
100.8090.0011	RECYCLING REGULAR STAFF	65,732.00	65,732.00	57,167.68	8,564.32	0.00	8,564.32		8,564.32	
100.8090.0013	RECYCLING TEMPORARY STAFF	18,000.00	18,000.00	15,604.38	2,395.62	0.00	2,395.62		2,395.62	
100.8090.0014	RECYCLING STAFF LONGEVITY	2,169.00	2,169.00	2,169.00	0.00	0.00	0.00		0.00	
100.8090.0017	RECYCLE STAFF UNIFOM ALL	550.00	550.00	550.00	0.00	0.00	0.00		0.00	
100.8090.0040	RECYCLE CONTRACTUAL EXP	500.00	700.00	663.29	36.71	0.00	36.71		36.71	
100.8090.0045	RECYCLE TRASH DISPOSAL	7,000.00	6,800.00	3,822.71	2,977.29	0.00	2,977.29		2,977.29	
100.8090.0046	RECYCLE EQUIPMENT RENTAL	15,000.00	15,000.00	0.00	15,000.00	0.00	15,000.00		15,000.00	
100.8090.0047	RECYCLING SPECIAL EXPEND	10,000.00	10,000.00	0.00	10,000.00	0.00	10,000.00		10,000.00	
100.8090.0048	LANDFILL MONITORING	30,000.00	30,000.00	7,913.95	22,086.05	16,000.00	6,086.05		6,086.05	
100.8090.0080	EMPLOYEE RETIREMENT	16,000.00	16,000.00	12,875.00	3,125.00	0.00	3,125.00		3,125.00	
100.8090.0082	SOCIAL SECURITY	8,000.00	8,000.00	5,718.76	2,281.24	0.00	2,281.24		2,281.24	
100.8090.0083	WORKMANS COMPENSATION	7,305.00	7,305.00	6,700.00	605.00	0.00	605.00		605.00	
100.8090.0084	HEALTH INSURANCE	9,800.00	9,800.00	9,660.60	139.40	0.00	139.40		139.40	
100.8090.0085	WELFARE FUND	1,050.00	1,050.00	1,050.00	0.00	0.00	0.00		0.00	
100.8091.0010	ENV.CONS.BOARD PERS.SERVS	11,904.00	11,904.00	10,469.59	1,434.41	0.00	1,434.41		1,434.41	
100.8091.0011	ECB WETLANDS INSPECTOR	15,000.00	15,000.00	13,269.16	1,730.84	0.00	1,730.84		1,730.84	
100.8091.0040	ECB CONTRACTUAL EXPENSE	300.00	300.00	59.85	240.15	0.00	240.15		240.15	
100.8091.0080	ECB EMPLOYEE BENEFITS	2,579.00	2,579.00	2,289.11	289.89	0.00	289.89		289.89	
100.8510.0040	PARK/BEAUTIFICATION EXPEN	3,000.00	8,500.00	5,911.00	2,589.00	0.00	2,589.00		2,589.00	
100.8810.0020	CEMETERIES EQUIP/REPAIRS	1,000.00	1,000.00	0.00	1,000.00	0.00	1,000.00		1,000.00	
100.8810.0040	CEMETERIES CONTRACTUAL	7,000.00	7,000.00	5,000.00	2,000.00	2,000.00	0.00		0.00	
100.9901.0099	TRANS TO DEBT SERVICE FD	610,000.00	610,000.00	610,000.00	0.00	0.00	0.00		0.00	
100.9902.0099	TRANSFER TO HIGHWAY FUND	240,000.00	240,000.00	240,000.00	0.00	0.00	0.00		0.00	
100.9903.0099	TRANSFER TO OTHER FUNDS	0.00	20,000.00	20,000.00	0.00	0.00	0.00		0.00	

TOWN OF CARMEL
BUDGET REVISIONS NOVEMBER 2015 - #2015/06

ACCOUNT #	ACCOUNT DESCRIPTION	ORIGINAL BUDGET	ADJUSTED BUDGET	YTD ACTUAL EXPENDED	YTD UNEXPENDED BALANCE	YTD ENCUMBERED	YTD AVAILABLE BALANCE	BUDGET ADJUSTMENT	NET BUDGET BALANCE	BUDGET REVISION #
	AMBULANCE									
201.4540.0040	CARMEL AMBULANCE CONTRACT	110,000.00	110,000.00	110,000.00	0.00	0.00	0.00		0.00	
201.4540.0041	NO.SALEM AMB. CONTRACT	12,800.00	12,800.00	12,800.00	0.00	0.00	0.00		0.00	
201.4540.0048	OTHER EXPENDITURES	1,700.00	4,400.00	4,439.51	(39.51)	0.00	(39.51)	100.00	60.49	BR#4
201.4540.0049	SERVICE-OTHR.DEPTS/GOVTS	3,200.00	3,200.00	2,499.00	701.00	0.00	701.00		701.00	
201.4540.0083	WORKERS COMP INS PREMIUM	35,400.00	32,700.00	27,950.00	4,750.00	0.00	4,750.00	(100.00)	4,650.00	BR#4
201.9025.0040	LOSAP ADMIN EXPENSE	1,000.00	1,000.00	650.00	350.00	0.00	350.00		350.00	
201.9025.0090	LOSAP CONTRIBUTION	55,700.00	55,700.00	48,218.00	7,482.00	0.00	7,482.00		7,482.00	
	FIRE DISTRICTS									
301.3410.0040	FIRE PROTECTION CONTRACT	748,000.00	748,000.00	748,000.00	0.00	0.00	0.00		0.00	
301.3410.0045	DRY HYDRANT EXPENDITURES	10,000.00	36,000.00	0.00	36,000.00	0.00	36,000.00		36,000.00	
301.3410.0048	OTHER EXPENDITURES	700.00	200.00	0.00	200.00	0.00	200.00		200.00	
301.3410.0049	SERVICES-OTHR.DEPTS/GOVTS	8,850.00	9,350.00	9,326.00	24.00	0.00	24.00		24.00	
301.3410.0099	WORKERS COMP INS PREMIUM	68,000.00	68,000.00	66,400.00	1,600.00	0.00	1,600.00		1,600.00	
301.9025.0040	LOSAP ADMIN EXPENSE	6,300.00	6,300.00	5,871.00	429.00	0.00	429.00		429.00	
301.9025.0090	LOSAP CONTRIBUTION	175,000.00	175,000.00	175,000.00	0.00	0.00	0.00		0.00	
302.3410.0040	FIRE PROTECTION CONTRACT	1,750,000.00	1,750,000.00	1,750,000.00	0.00	0.00	0.00		0.00	
302.3410.0045	DRY HYDRANT EXPENDITURES	1,000.00	1,000.00	0.00	1,000.00	0.00	1,000.00		1,000.00	
302.3410.0048	OTHER EXPENDITURES	9,000.00	9,000.00	3,092.13	5,907.87	0.00	5,907.87		5,907.87	
302.3410.0049	SERVICES-OTHR.DEPTS/GOVTS	23,700.00	23,700.00	20,571.00	3,129.00	0.00	3,129.00		3,129.00	
302.3410.0099	WORKERS COMP INS PREMIUM	90,000.00	90,000.00	88,401.22	1,598.78	0.00	1,598.78		1,598.78	
302.9025.0040	LOSAP ADMIN. EXPENSE	8,700.00	8,700.00	6,667.00	2,033.00	0.00	2,033.00		2,033.00	
302.9025.0090	LOSAP CONTRIBUTION	207,000.00	207,000.00	207,000.00	0.00	0.00	0.00		0.00	
303.3410.0040	FIRE PROTECTION CONTRACT	530,000.00	530,000.00	530,000.00	0.00	0.00	0.00		0.00	
303.3410.0048	OTHER EXPENDITURES	8,100.00	21,900.00	22,268.30	(368.30)	0.00	(368.30)	400.00	31.70	BR#4
303.3410.0049	SERVICES-OTHR.DEPTS/GOVTS	7,550.00	7,550.00	6,788.00	762.00	0.00	762.00		762.00	
303.3410.0099	WORKERS COMP INS PREMIUM	52,400.00	52,400.00	51,151.00	1,249.00	0.00	1,249.00	(400.00)	849.00	BR#4
303.9025.0040	LOSAP ADMIN. EXPENSE	5,600.00	5,600.00	5,450.00	150.00	0.00	150.00		150.00	
303.9025.0090	LOSAP CONTRIBUTION	75,000.00	95,000.00	95,000.00	0.00	0.00	0.00		0.00	
351.3410.0040	PAYMENT TO FIRE DIST	243,405.00	243,405.00	243,405.00	0.00	0.00	0.00		0.00	
352.3410.0040	PAID TO FIRE DIST.TREAS	78,684.00	78,684.00	78,684.00	0.00	0.00	0.00		0.00	
	LAKE DISTRICTS									
401.7140.0013	TEMPORARY LABOR	20,000.00	33,099.00	33,098.67	0.33	0.00	0.33		0.33	
401.7140.0020	EQUIPMENT	35,000.00	0.00	0.00	0.00	0.00	0.00		0.00	
401.7140.0040	CONTRACTUAL EXPENSES	3,000.00	3,000.00	2,650.44	349.56	0.00	349.56	2,300.00	2,649.56	BR#12
401.7140.0041	SUPPLIES & MATERIALS	5,885.00	5,885.00	4,836.28	1,048.72	210.68	838.04	(600.00)	238.04	BR#12
401.7140.0042	UTILITIES EXPENSES	2,000.00	5,000.00	4,238.79	761.21	224.62	536.59		536.59	
401.7140.0043	INSURANCE	1,300.00	1,300.00	0.00	1,300.00	0.00	1,300.00		1,300.00	
401.7140.0044	ENGINEERING SERVICES	3,000.00	3,000.00	3,000.00	0.00	0.00	0.00		0.00	
401.7140.0045	O&M CUSTODIAL CONTRACT	13,000.00	13,000.00	12,900.00	100.00	0.00	100.00		100.00	
401.7140.0046	CONTRACT SPECIAL SERVICES	500.00	500.00	0.00	500.00	0.00	500.00	(500.00)	0.00	BR#12
401.7140.0047	REFUSE DISPOSAL	700.00	700.00	385.00	315.00	0.00	315.00		315.00	
401.7140.0048	OTHER EXPENDITURES	1,300.00	1,300.00	1,461.28	(161.28)	0.00	(161.28)	200.00	38.72	BR#12
401.7140.0049	SERVICES-OTHR.DEPTS/GOVTS	8,000.00	8,000.00	7,543.00	457.00	0.00	457.00	(450.00)	7.00	BR#12
401.7140.0054	CAPITAL EXPENDITURES	15,000.00	49,859.00	47,609.00	2,250.00	2,250.00	0.00		0.00	
401.7140.0082	SOCIAL SECURITY	1,600.00	3,342.00	2,586.37	755.63	0.00	755.63	(750.00)	5.63	BR#12
401.7140.0083	WORKMANS COMPENSATION INS	2,100.00	2,100.00	1,900.00	200.00	0.00	200.00	(200.00)	0.00	BR#12
401.7140.0099	REPAIR RESERVE FUND	5,000.00	0.00	0.00	0.00	0.00	0.00		0.00	
402.7110.0013	TEMPORARY LABOR	500.00	500.00	0.00	500.00	0.00	500.00		500.00	

TOWN OF CARMEL
BUDGET REVISIONS NOVEMBER 2015 - #2015/06

ACCOUNT #	ACCOUNT DESCRIPTION	ORIGINAL BUDGET	ADJUSTED BUDGET	YTD ACTUAL EXPENDED	YTD UNEXPENDED BALANCE	YTD ENCUMBERED	YTD AVAILABLE BALANCE	BUDGET ADJUSTMENT	NET BUDGET BALANCE	BUDGET REVISION #
402.7110.0020	EQUIPMENT	500.00	500.00	0.00	500.00	0.00	500.00		500.00	
402.7110.0040	CONTRACTUAL EXPENSES	4,200.00	17,331.00	15,761.07	1,569.93	0.00	1,569.93		1,569.93	
402.7110.0041	WATER QUALITY/BIOMASS STUDY EXPENSE	2,500.00	6,645.00	3,145.00	3,500.00	0.00	3,500.00		3,500.00	
402.7110.0043	INSURANCE	600.00	600.00	0.00	600.00	0.00	600.00		600.00	
402.7110.0044	ENGINEERING SERVICES	2,000.00	2,000.00	2,000.00	0.00	0.00	0.00		0.00	
402.7110.0045	LAKE MAINTENANCE CONTRACT	900.00	900.00	0.00	900.00	0.00	900.00		900.00	
402.7110.0048	OTHER EXPENITURES	460.00	460.00	370.93	89.07	0.00	89.07		89.07	
402.7110.0049	SERVICES-OTHR.DEPTS/GOVTS	1,500.00	1,500.00	1,340.00	160.00	0.00	160.00		160.00	
402.7110.0099	REPAIR RESERVE FUND	7,500.00	0.00	0.00	0.00	0.00	0.00		0.00	
403.7140.0013	TEMPORARY LABOR	200.00	200.00	0.00	200.00	0.00	200.00		200.00	
403.7140.0020	EQUIPMENT	710.00	710.00	0.00	710.00	0.00	710.00		710.00	
403.7140.0040	CONTRACTUAL EXPENSES	12,000.00	6,200.00	953.56	5,246.44	0.00	5,246.44		5,246.44	
403.7140.0041	LAKE TREATMENT EXPENSE	8,900.00	13,500.00	12,900.00	600.00	600.00	0.00		0.00	
403.7140.0043	INSURANCE	350.00	350.00	0.00	350.00	0.00	350.00		350.00	
403.7140.0044	ENGINEERING SERVICES	3,000.00	3,000.00	3,000.00	0.00	0.00	0.00		0.00	
403.7140.0045	MAINTENANCE CONTRACTS	2,000.00	2,000.00	1,560.00	440.00	390.00	50.00		50.00	
403.7140.0048	OTHER EXPENDITURES	5,000.00	5,000.00	600.00	4,400.00	0.00	4,400.00		4,400.00	
403.7140.0049	SERVICE-OTHR.DEPTS/GOVTS	1,500.00	2,700.00	2,574.00	126.00	0.00	126.00		126.00	
403.7140.0099	REPAIR RESERVE FUND	7,410.00	7,410.00	0.00	7,410.00	0.00	7,410.00		7,410.00	
404.7140.0013	TEMPORARY LABOR	18,500.00	18,500.00	17,530.32	969.68	0.00	969.68		969.68	
404.7140.0040	CONTRACTUAL EXPENSES	8,500.00	8,500.00	8,307.03	192.97	0.00	192.97		192.97	
404.7140.0041	SUPPLIES & MATERIALS	1,000.00	1,000.00	996.00	4.00	0.00	4.00		4.00	
404.7140.0042	UTILITIES EXPENSES	800.00	800.00	436.50	363.50	0.00	363.50		363.50	
404.7140.0043	INSURANCE	500.00	500.00	0.00	500.00	0.00	500.00		500.00	
404.7140.0044	ENGINEERING SERVICES	3,000.00	3,000.00	3,000.00	0.00	0.00	0.00		0.00	
404.7140.0045	MAINTENANCE CONTRACTS	3,500.00	3,500.00	2,520.00	980.00	630.00	350.00		350.00	
404.7140.0046	CONTRACTUAL RENTALS	900.00	900.00	382.36	517.64	0.00	517.64		517.64	
404.7140.0047	REFUSE DISPOSAL	300.00	300.00	299.23	0.77	0.00	0.77		0.77	
404.7140.0048	OTHER EXPENDITURES	950.00	950.00	856.93	93.07	0.00	93.07		93.07	
404.7140.0049	SERVICES-OTHR.DEPTS/GOVTS	3,600.00	3,600.00	3,004.00	596.00	0.00	596.00		596.00	
404.7140.0082	SOCIAL SECURITY	1,250.00	1,250.00	1,249.98	0.02	0.00	0.02		0.02	
404 7140.0083	WORKMANS COMPENSATION INS	2,100.00	2,100.00	1,900.00	200.00	0.00	200.00		200.00	
404.7140.0099	REPAIR RESERVE FUND	1,000.00	1,000.00	0.00	1,000.00	0.00	1,000.00		1,000.00	
471 7140.0040	CONTRACTUAL EXPENSES	227,800.00	227,800.00	227,800.00	0.00	0.00	0.00		0.00	

TOWN OF CARMEL
BUDGET REVISIONS NOVEMBER 2015 - #2015/06

ACCOUNT #	ACCOUNT DESCRIPTION	ORIGINAL BUDGET	ADJUSTED BUDGET	YTD ACTUAL EXPENDED	YTD UNEXPENDED BALANCE	YTD ENCUMBERED	YTD AVAILABLE BALANCE	BUDGET ADJUSTMENT	NET BUDGET BALANCE	BUDGET REVISION #
	HIGHWAY FUND									
500.5110.0011	GENERAL REPAIR LABOR	1,396,475.00	1,396,475.00	1,199,949.56	196,525.44	0.00	196,525.44		196,525.44	
500.5110.0012	GEN REP LABOR OVERTIME	3,000.00	3,000.00	2,344.82	655.18	0.00	655.18		655.18	
500.5110.0013	GEN REP LABOR TEMPORARY	40,000.00	64,500.00	61,218.30	3,281.70	0.00	3,281.70	(1,039.00)	2,242.70	BR#11
500.5110.0014	GENERAL REPAIR LONGEVITY	52,319.00	52,319.00	53,358.00	(1,039.00)	0.00	(1,039.00)	1,039.00	0.00	BR#11
500.5110.0017	STAFF CLOTHING ALLOWANCE	11,550.00	11,550.00	11,000.00	550.00	0.00	550.00		550.00	
500.5110.0018	HIGHWAY DIFFERENTIAL COMP	3,000.00	3,000.00	1,742.05	1,257.95	0.00	1,257.95		1,257.95	
500.5110.0019	GEN REP PAID ABSENCES	0.00	3,863.88	3,863.27	0.61	0.00	0.61		0.61	
500.5110.0020	GENERAL REPAIR ROAD TOOLS	7,000.00	7,000.00	5,238.30	1,761.70	0.00	1,761.70		1,761.70	
500.5110.0040	GENERAL REP.CONTRACT EXP	120,000.00	130,000.00	121,707.42	8,292.58	250.00	8,042.58		8,042.58	
500.5110.0041	GENERAL REPAIR GAS & FUEL	100,000.00	100,000.00	49,671.52	50,328.48	2,640.00	47,688.48		47,688.48	
500.5110.0046	CONTRACTUAL ROAD RENTALS	5,000.00	5,000.00	2,495.00	2,505.00	0.00	2,505.00		2,505.00	
500.5110.0080	EMPLOYEE RETIREMENT SYST.	350,000.00	312,000.00	311,250.00	750.00	0.00	750.00		750.00	
500.5110.0081	MCT MOBILITY TAX	5,575.00	5,075.00	3,987.19	1,087.81	0.00	1,087.81		1,087.81	
500.5110.0082	SOCIAL SECURITY	150,000.00	140,000.00	100,773.73	39,226.27	0.00	39,226.27		39,226.27	
500.5110.0083	WORKERS COMPENSATION INS	425,000.00	400,000.00	390,000.00	10,000.00	0.00	10,000.00		10,000.00	
500.5110.0084	HEALTH INSURANCE	430,000.00	430,000.00	425,122.14	4,877.86	0.00	4,877.86		4,877.86	
500.5110.0085	EMPLOYEE WELFARE FUND	23,100.00	23,100.00	21,787.50	1,312.50	0.00	1,312.50		1,312.50	
500.5110.0086	RETIREES HEALTH INSRUANCE	285,000.00	285,000.00	244,691.22	40,308.78	0.00	40,308.78		40,308.78	
500.5110.0087	DISABIL INSURANCE EXPENSE	3,700.00	3,700.00	652.62	3,047.38	0.00	3,047.38		3,047.38	
500.5110.0088	STAFF ACCRUED COMP ABSENC	170,000.00	170,000.00	0.00	170,000.00	0.00	170,000.00		170,000.00	
500.5110.0089	HWY STAFF MEDICAL EXAMS	2,000.00	2,000.00	1,614.00	386.00	0.00	386.00		386.00	
500.5112.0012	CHIPS OVERTIME	10,000.00	20,000.00	3,771.15	16,228.85	0.00	16,228.85		16,228.85	
500.5112.0020	C.H.I.P.S-CONTRCT EXPENSE	339,000.00	559,000.00	280,755.71	278,244.29	11,212.00	267,032.29		267,032.29	
500.5112.0082	SOCIAL SECURITY	1,582.00	6,498.00	291.13	6,206.87	0.00	6,206.87		6,206.87	
500.5130.0011	MACHINERY REPAIR LABOR	266,951.00	266,951.00	232,175.61	34,775.39	0.00	34,775.39		34,775.39	
500.5130.0012	MACHINERY REPAIR OVERTIME	8,000.00	8,000.00	7,692.81	307.19	0.00	307.19		307.19	
500.5130.0014	MACH REP.STAFF LONGEVITY	7,862.00	7,862.00	6,100.00	1,762.00	0.00	1,762.00		1,762.00	
500.5130.0016	CENTRAL GARAGE SERVICES	5,000.00	5,000.00	0.00	5,000.00	0.00	5,000.00		5,000.00	
500.5130.0017	STAFF CLOTHING ALLOWANCE	2,200.00	2,200.00	2,200.00	0.00	0.00	0.00		0.00	
500.5130.0018	TOOL EXP REIMBURSEMENT	1,200.00	1,200.00	1,200.00	0.00	0.00	0.00		0.00	
500.5130.0019	PAID COMPENSATED ABSENCE	0.00	2,004.60	2,004.60	0.00	0.00	0.00		0.00	
500.5130.0020	MACHINERY REPAIR TOOLS	10,000.00	10,000.00	10,010.77	(10.77)	0.00	(10.77)	1,000.00	989.23	BR#11
500.5130.0021	HWY MACHINERY & EQUIPMENT	2,000.00	3,000.00	2,460.22	539.78	505.00	34.78		34.78	
500.5130.0040	MACHINERY REPAIR EXPENSES	400,000.00	400,467.53	376,403.94	24,063.59	10,984.76	13,078.83		13,078.83	
500.5130.0041	MACHINERY REPAIR CAPTL EX	150,000.00	150,000.00	0.00	150,000.00	0.00	150,000.00		150,000.00	
500.5130.0046	EQUIPMENT LEASES/RENTALS	28,476.00	28,476.00	23,086.00	5,390.00	4,320.00	1,070.00		1,070.00	
500.5130.0080	EMPLOYEE RETIREMENT	60,000.00	47,000.00	46,250.00	750.00	0.00	750.00		750.00	
500.5130.0081	MCT MOBILITY TAX	1,272.00	1,272.00	832.43	439.57	0.00	439.57		439.57	
500.5130.0082	SOCIAL SECURITY	28,000.00	28,000.00	18,767.79	9,232.21	0.00	9,232.21		9,232.21	
500.5130.0083	WORKERS COMPENSATION INS.	35,000.00	30,000.00	30,000.00	0.00	0.00	0.00		0.00	
500.5130.0084	HEALTH INSURANCE	90,000.00	89,000.00	86,825.28	2,174.72	0.00	2,174.72	(1,000.00)	1,174.72	BR#11
500.5130.0085	EMPLOYEE WELFARE FUND	4,200.00	4,200.00	4,200.00	0.00	0.00	0.00		0.00	
500.5140.0011	WEEDS & BRUSH LABOR	135,490.00	135,490.00	117,840.25	17,649.75	0.00	17,649.75		17,649.75	
500.5140.0012	WEEDS & BRUSH OVERTIME	10,000.00	10,000.00	6,014.45	3,985.55	0.00	3,985.55		3,985.55	
500.5140.0014	WEEDS & BRUSH LONGEVITY	2,440.00	2,440.00	0.00	2,440.00	0.00	2,440.00		2,440.00	
500.5140.0017	STAFF CLOTHING ALLOWANCES	1,100.00	1,100.00	1,100.00	0.00	0.00	0.00		0.00	
500.5140.0019	WEEDS & BRUSH OTHER COMP	0.00	1,135.94	1,135.94	0.00	0.00	0.00		0.00	
500.5140.0020	WEEDS AND BRUSH TOOLS	3,000.00	3,000.00	1,448.00	1,552.00	0.00	1,552.00		1,552.00	
500.5140.0040	WEEDS & BRUSH EXPENSE	5,000.00	5,000.00	0.00	5,000.00	0.00	5,000.00		5,000.00	
500.5140.0041	WEEDS & BRUSH-GAS & FUEL	25,000.00	25,000.00	19,114.72	5,885.28	660.00	5,225.28		5,225.28	
500.5140.0049	OTHER EXPENDITURES	2,000.00	2,000.00	1,604.24	395.76	150.00	245.76		245.76	
500.5140.0080	EMPLOYEE RETIREMENT	32,500.00	21,500.00	21,250.00	250.00	0.00	250.00		250.00	
500.5140.0081	MCT MOBILITY TAX	674.00	674.00	425.13	248.87	0.00	248.87		248.87	

TOWN OF CARMEL
BUDGET REVISIONS NOVEMBER 2015 - #2015/06

ACCOUNT #	ACCOUNT DESCRIPTION	ORIGINAL BUDGET	ADJUSTED BUDGET	YTD ACTUAL EXPENDED	YTD UNEXPENDED BALANCE	YTD ENCUMBERED	YTD AVAILABLE BALANCE	BUDGET ADJUSTMENT	NET BUDGET BALANCE	BUDGET REVISION #
500.5140.0082	SOCIAL SECURITY	13,500.00	13,500.00	9,606.01	3,893.99	0.00	3,893.99		3,893.99	
500.5140.0083	WORKERS COMPENSATION INS.	25,000.00	20,000.00	20,000.00	0.00	0.00	0.00		0.00	
500.5140.0084	HEALTH INSURANCE	45,000.00	45,000.00	43,412.64	1,587.36	0.00	1,587.36		1,587.36	
500.5140.0085	EMPLOYEE WELFARE FUND	2,100.00	2,100.00	2,100.00	0.00	0.00	0.00		0.00	
500.5142.0011	SNOW REMOVAL LABOR	197,191.00	197,191.00	171,503.04	25,687.96	0.00	25,687.96		25,687.96	
500.5142.0012	SNOW REMOVAL OVERTIME	250,000.00	430,000.00	384,770.49	45,229.51	0.00	45,229.51		45,229.51	
500.5142.0013	SNOW REMOVAL TEMP LABOR	0.00	500.00	465.00	35.00	0.00	35.00		35.00	
500.5142.0014	SNOW REMOVAL LONGEVITY	5,286.00	5,286.00	3,524.00	1,762.00	0.00	1,762.00		1,762.00	
500.5142.0017	STAFF CLOTHING ALLOWANCE	1,650.00	1,650.00	1,650.00	0.00	0.00	0.00		0.00	
500.5142.0040	SNOW REMOVAL RENTALS	3,500.00	3,800.00	3,696.00	104.00	0.00	104.00		104.00	
500.5142.0041	SNOW REMOVAL-GAS & FUEL	75,000.00	75,000.00	42,760.67	32,239.33	0.00	32,239.33		32,239.33	
500.5142.0046	CONTRACTUAL SWEEPING	32,000.00	39,249.00	39,249.00	0.00	0.00	0.00		0.00	
500.5142.0049	SNOW CONTROL MATERIALS	650,000.00	692,451.00	594,168.25	98,282.75	84,000.00	14,282.75		14,282.75	
500.5142.0080	EMPLOYEE RETIREMNT	95,000.00	77,000.00	76,250.00	750.00	0.00	750.00		750.00	
500.5142.0081	MCT MOBILITY TAX	1,278.00	1,778.00	1,514.58	263.42	0.00	263.42		263.42	
500.5142.0082	SOCIAL SECURITY	40,000.00	50,000.00	43,362.73	6,637.27	0.00	6,637.27		6,637.27	
500.5142.0083	WORKERS COMPENSATION INS.	35,000.00	35,000.00	30,000.00	5,000.00	0.00	5,000.00	(2,000.00)	3,000.00	BR#11
500.5142.0084	HEALTH INSURANCE	42,500.00	42,500.00	44,038.95	(1,538.95)	0.00	(1,538.95)	2,000.00	461.05	BR#11
500.5142.0085	EMPLOYEE WELFARE FUND	3,150.00	3,150.00	3,150.00	0.00	0.00	0.00		0.00	
500.5148.0011	SERVICES OTHER GOVT LABOR	1,000.00	1,000.00	0.00	1,000.00	0.00	1,000.00		1,000.00	
500.5148.0040	SERVICE FOR OTHER GOVTS	2,000.00	6,500.00	6,237.08	262.92	0.00	262.92		262.92	
500.9901.0099	TRANSFER TO DEBT SERV FD	1,150,000.00	1,150,000.00	1,150,000.00	0.00	0.00	0.00		0.00	
500.9950.0099	TRANSFER TO CAP PROJ FUND	0.00	100,000.00	0.00	100,000.00	0.00	100,000.00		100,000.00	
	GARBAGE DISTRICTS									
571.8160.0010	PERSONAL SERVS	15,000.00	15,000.00	0.00	15,000.00	0.00	15,000.00		15,000.00	
571.8160.0040	CONTRACT EXPENSE	1,200.00	1,200.00	0.00	1,200.00	0.00	1,200.00		1,200.00	
571.8160.0045	GARBAGE CONTRACT	2,468,906.00	2,471,909.00	1,853,931.14	617,977.86	0.00	617,977.86		617,977.86	
571.8160.0049	SPECIAL DIST ADMIN EXPENSES	8,758.00	5,755.00	0.00	5,755.00	0.00	5,755.00		5,755.00	
571.8160.0099	REPAIR RESERVE FUND	40,000.00	40,000.00	0.00	40,000.00	0.00	40,000.00		40,000.00	
572.8160.0010	PERSONAL SERVS	5,000.00	5,000.00	0.00	5,000.00	0.00	5,000.00		5,000.00	
572.8160.0040	CONTRACT EXPENSE	1,600.00	1,600.00	0.00	1,600.00	0.00	1,600.00		1,600.00	
572.8160.0045	GARBAGE CONTRACT	260,808.00	261,954.00	218,294.20	43,659.80	0.00	43,659.80		43,659.80	
572.8160.0049	SPECIAL DIST ADMIN EXPENSES	1,500.00	354.00	0.00	354.00	0.00	354.00		354.00	
572.8160.0099	REPAIR RESERVE FUND	30,000.00	30,000.00	0.00	30,000.00	0.00	30,000.00		30,000.00	
	WATER DISTRICTS									
601.8310.0013	TEMPORARY LABOR	400.00	400.00	0.00	400.00	0.00	400.00		400.00	
601.8310.0020	EQUIPMENT METERS	1,000.00	1,000.00	684.85	315.15	0.00	315.15		315.15	
601.8310.0040	CONTRACTUAL REPAIRS	5,000.00	8,395.00	4,841.93	3,553.07	0.00	3,553.07		3,553.07	
601.8310.0043	INSURANCE EXPENDITURES	700.00	700.00	0.00	700.00	0.00	700.00		700.00	
601.8310.0044	ENGINEERING SERVICES	3,000.00	3,000.00	3,000.00	0.00	0.00	0.00		0.00	
601.8310.0047	EMERGENCY REPAIRS	9,500.00	37,000.00	26,514.10	10,485.90	0.00	10,485.90		10,485.90	
601.8310.0048	OTHR.OPERATING EXPENSES	1,500.00	1,500.00	838.79	661.21	0.00	661.21		661.21	
601.8310.0049	SERVICES-OTHR.DEPTS/GOVTS	8,000.00	8,000.00	7,574.00	426.00	0.00	426.00		426.00	
601.8310.0099	REPAIR RESERVE FUND	7,500.00	0.00	0.00	0.00	0.00	0.00		0.00	
601.9901.0099	TRANSFER TO OTHER FUNDS	44,000.00	44,000.00	44,000.00	0.00	0.00	0.00		0.00	
601.9902.0099	TRANSFER TO DEBT FUND	6,500.00	6,500.00	6,500.00	0.00	0.00	0.00		0.00	
602.8310.0013	TEMPORARY LABOR	3,000.00	3,000.00	0.00	3,000.00	0.00	3,000.00		3,000.00	
602.8310.0020	EQUIPMENT METERS	10,000.00	20,000.00	17,866.40	2,133.60	2,450.00	(316.40)	1,000.00	683.60	BR#13
602.8310.0040	CONTRACTUAL REPAIRS	75,000.00	88,380.00	42,231.16	46,148.84	25,743.75	20,405.09	5,000.00	25,405.09	BR#13
602.8310.0041	CHEMICAL EXPENSES	75,000.00	75,000.00	57,148.31	17,851.69	3,254.40	14,597.29		14,597.29	
602.8310.0042	UTILITIES EXPENSES	110,000.00	110,000.00	90,890.19	19,109.81	828.52	18,281.29		18,281.29	
602.8310.0043	INSURANCE EXPENDITURES	12,000.00	12,000.00	0.00	12,000.00	0.00	12,000.00		12,000.00	
602.8310.0044	ENGINEERING SERVICES	35,000.00	35,000.00	35,000.00	0.00	0.00	0.00		0.00	
602.8310.0045	OPER.& MAINT.CONTRACT	213,984.00	220,404.00	202,036.78	18,367.22	0.00	18,367.22		18,367.22	

TOWN OF CARMEL
BUDGET REVISIONS NOVEMBER 2015 - #2015/06

ACCOUNT #	ACCOUNT DESCRIPTION	ORIGINAL BUDGET	ADJUSTED BUDGET	YTD ACTUAL EXPENDED	YTD UNEXPENDED BALANCE	YTD ENCUMBERED	YTD AVAILABLE BALANCE	BUDGET ADJUSTMENT	NET BUDGET BALANCE	BUDGET REVISION #
602.8310.0046	PURCHASE OF WATER	650,000.00	650,000.00	445,900.41	204,099.59	0.00	204,099.59		204,099.59	
602.8310.0047	EMERGENCY REPAIRS	100,000.00	179,471.86	154,273.31	25,198.55	19,234.24	5,964.31	4,000.00	9,964.31	BR#13
602.8310.0048	OTHER OPERATING EXPENSES	40,000.00	40,000.00	23,916.99	16,083.01	717.00	15,366.01		15,366.01	
602.8310.0049	SERVICES-OTHR.DEPTS/GOVTS	160,000.00	160,000.00	153,937.86	6,062.14	0.00	6,062.14		6,062.14	
602.8310.0090	CONTINGENCY	50,000.00	25,000.00	0.00	25,000.00	0.00	25,000.00	(10,000.00)	15,000.00	BR#13
602.8310.0099	REPAIR RESERVE FUND	70,000.00	200.00	0.00	200.00	0.00	200.00		200.00	
602.9901.0099	TRANS TO DEBT SERVICE FD	74,000.00	74,000.00	74,000.00	0.00	0.00	0.00		0.00	
603.8310.0013	TEMPORARY LABOR	500.00	500.00	0.00	500.00	0.00	500.00		500.00	
603.8310.0020	EQUIPMENT	3,500.00	4,500.00	3,944.00	556.00	0.00	556.00		556.00	
603.8310.0040	CONTRACTUAL REPAIRS	35,000.00	34,095.00	5,130.38	28,964.62	352.35	28,612.27		28,612.27	
603.8310.0041	CHEMICAL EXPENSES	2,500.00	2,500.00	503.56	1,996.44	0.00	1,996.44		1,996.44	
603.8310.0042	UTILITIES EXPENSES	13,500.00	13,500.00	12,273.09	1,226.91	0.00	1,226.91		1,226.91	
603.8310.0043	INSURANCE EXPENDITURES	2,200.00	2,200.00	0.00	2,200.00	0.00	2,200.00		2,200.00	
603.8310.0044	ENGINEERING SERVICES	12,000.00	12,000.00	12,000.00	0.00	0.00	0.00		0.00	
603.8310.0045	OPER.& MAINT.CONTRACT	30,220.00	31,125.00	28,530.70	2,594.30	0.00	2,594.30		2,594.30	
603.8310.0046	PURCHASE OF WATER	1,000.00	1,000.00	0.00	1,000.00	0.00	1,000.00		1,000.00	
603.8310.0047	EMERGENCY REPAIRS	40,000.00	40,000.00	13,537.92	26,462.08	5,028.72	21,433.36		21,433.36	
603.8310.0048	OTHR.OPERATING EXPENSES	7,500.00	7,500.00	4,436.58	3,063.42	413.00	2,650.42		2,650.42	
603.8310.0049	SERVICES-OTHR.DEPTS/GOVTS	18,500.00	18,500.00	17,148.70	1,351.30	0.00	1,351.30		1,351.30	
603.8310.0099	REPAIR RESERVE FUND	8,000.00	7,000.00	0.00	7,000.00	0.00	7,000.00		7,000.00	
603.9901.0099	TRANS TO DEBT SERVICE FD.	24,050.00	24,050.00	24,050.00	0.00	0.00	0.00		0.00	
604.8310.0013	TEMPORARY LABOR	500.00	500.00	0.00	500.00	0.00	500.00		500.00	
604.8310.0020	EQUIPMENT	500.00	500.00	0.00	500.00	0.00	500.00		500.00	
604.8310.0040	CONTRACTUAL REPAIRS	19,500.00	19,500.00	6,322.80	13,177.20	2,055.80	11,121.40		11,121.40	
604.8310.0041	CHEMICAL EXPENSES	1,500.00	1,500.00	124.00	1,376.00	0.00	1,376.00		1,376.00	
604.8310.0042	UTILITIES EXPENSES	8,800.00	8,800.00	5,720.87	3,079.13	0.00	3,079.13		3,079.13	
604.8310.0043	INSURANCE EXPENDITURES	2,200.00	2,200.00	0.00	2,200.00	0.00	2,200.00		2,200.00	
604.8310.0044	ENGINEERING SERVICES	2,500.00	2,500.00	2,500.00	0.00	0.00	0.00		0.00	
604.8310.0045	OPERATION & MAINT CONTRCT	18,282.00	18,282.00	16,750.47	1,531.53	0.00	1,531.53		1,531.53	
604.8310.0046	PURCHASE OF WATER	500.00	500.00	0.00	500.00	0.00	500.00		500.00	
604.8310.0047	EMERGENCY REPAIRS	30,000.00	30,000.00	23,969.04	6,030.96	2,878.36	3,152.60		3,152.60	
604.8310.0048	OTHER OPERATING EXPENSES	4,000.00	4,000.00	2,421.71	1,578.29	37.00	1,541.29		1,541.29	
604.8310.0049	SERVICES-OTHR.DEPTS/GOVTS	15,000.00	15,000.00	11,967.38	3,032.62	0.00	3,032.62		3,032.62	
604.8310.0086	RETIREES HEALTH INSURNACE	7,000.00	7,000.00	1,258.80	5,741.20	0.00	5,741.20		5,741.20	
604.8310.0099	REPAIR RESERVE FUND	9,300.00	9,300.00	0.00	9,300.00	0.00	9,300.00		9,300.00	
604.9901.0099	TRANSFER TO DEBT SERVICE	34,500.00	34,500.00	34,500.00	0.00	0.00	0.00		0.00	
605.8310.0013	TEMPORARY LABOR	500.00	500.00	0.00	500.00	0.00	500.00		500.00	
605.8310.0020	EQUIPMENT	3,500.00	5,000.00	4,875.00	125.00	0.00	125.00		125.00	
605.8310.0040	CONTRACTUAL REPAIRS	3,000.00	2,994.00	1,087.00	1,907.00	200.00	1,707.00		1,707.00	
605.8310.0041	CHEMICAL EXPENSES	500.00	500.00	124.00	376.00	0.00	376.00		376.00	
605.8310.0042	UTILITIES EXPENSES	3,800.00	4,800.00	4,309.04	490.96	0.00	490.96		490.96	
605.8310.0043	INSURANCE EXPENDITURES	600.00	600.00	0.00	600.00	0.00	600.00		600.00	
605.8310.0044	ENGINEERING SERVICES	1,500.00	1,500.00	1,500.00	0.00	0.00	0.00		0.00	
605.8310.0045	OPER.& MAINT.CONTRACT	10,908.00	10,914.00	10,004.06	909.94	0.00	909.94		909.94	
605.8310.0047	EMERGENCY REPAIRS	8,000.00	11,130.00	3,876.50	7,253.50	0.00	7,253.50		7,253.50	
605.8310.0048	OTHR.OPERATING EXPENSES	2,350.00	2,350.00	2,062.95	287.05	0.00	287.05		287.05	
605.8310.0049	SERVICES-OTHR.DEPTS/GOVTS	5,800.00	5,800.00	4,272.77	1,527.23	0.00	1,527.23		1,527.23	
605.8310.0099	REPAIR RESERVE FUND	4,600.00	2,100.00	0.00	2,100.00	0.00	2,100.00		2,100.00	
605.9901.0099	TRANSFER TO DEBT FUND	5,700.00	5,700.00	5,700.00	0.00	0.00	0.00		0.00	
606.8310.0013	TEMPORARY LABOR	500.00	500.00	0.00	500.00	0.00	500.00		500.00	
606.8310.0020	EQUIPMENT	1,000.00	1,000.00	0.00	1,000.00	0.00	1,000.00		1,000.00	
606.8310.0040	CONTRACTUAL REPAIRS	18,000.00	12,998.00	3,942.35	9,055.65	200.00	8,855.65		8,855.65	
606.8310.0041	CHEMICAL EXPENSES	700.00	700.00	248.00	452.00	0.00	452.00		452.00	
606.8310.0042	UTILITIES EXPENSES	10,500.00	10,500.00	9,172.06	1,327.94	0.00	1,327.94		1,327.94	

TOWN OF CARMEL
BUDGET REVISIONS NOVEMBER 2015 - #2015/06

ACCOUNT #	ACCOUNT DESCRIPTION	ORIGINAL BUDGET	ADJUSTED BUDGET	YTD ACTUAL EXPENDED	YTD UNEXPENDED BALANCE	YTD ENCUMBERED	YTD AVAILABLE BALANCE	BUDGET ADJUSTMENT	NET BUDGET BALANCE	BUDGET REVISION #
606.8310.0043	INSURANCE EXPENDITURES	1,500.00	1,500.00	0.00	1,500.00	0.00	1,500.00		1,500.00	
606.8310.0044	ENGINEERING SERVICES	3,000.00	3,000.00	3,000.00	0.00	0.00	0.00		0.00	
606.8310.0045	OPER.& MAINT.CONTRACT	17,340.00	17,342.00	15,895.99	1,446.01	0.00	1,446.01		1,446.01	
606.8310.0047	EMERGENCY REPAIRS	8,500.00	18,500.00	16,013.68	2,486.32	0.00	2,486.32		2,486.32	
606.8310.0048	OTHR.OPERATING EXPENSES	3,900.00	3,900.00	3,637.59	262.41	57.00	205.41		205.41	
606.8310.0049	SERVICES-OTHR.DEPTS/GOVTS	8,800.00	8,800.00	7,776.94	1,023.06	0.00	1,023.06		1,023.06	
606.8310.0099	REPAIR RESERVE FUND	5,000.00	0.00	0.00	0.00	0.00	0.00		0.00	
606.9901.0099	TRANSFER TO DEBT FUND	20,000.00	20,000.00	20,000.00	0.00	0.00	0.00		0.00	
607.8310.0013	TEMPORARY LABOR	500.00	500.00	0.00	500.00	0.00	500.00		500.00	
607.8310.0020	EQUIPMENT	500.00	500.00	0.00	500.00	0.00	500.00		500.00	
607.8310.0040	CONTRACTUAL REPAIRS	6,500.00	6,493.00	1,464.50	5,028.50	0.00	5,028.50		5,028.50	
607.8310.0041	CHEMICAL EXPENSES	500.00	500.00	124.00	376.00	0.00	376.00		376.00	
607.8310.0042	UTILITIES EXPENSES	10,000.00	10,000.00	8,385.76	1,614.24	0.00	1,614.24		1,614.24	
607.8310.0043	INSURANCE EXPENDITURES	1,200.00	1,200.00	0.00	1,200.00	0.00	1,200.00		1,200.00	
607.8310.0044	ENGINEERING SERVICES	2,000.00	2,000.00	2,000.00	0.00	0.00	0.00		0.00	
607.8310.0045	OPER.& MAINT.CONTRACT	14,532.00	14,539.00	13,327.16	1,211.84	0.00	1,211.84		1,211.84	
607.8310.0046	PURCHASE OF WATER	500.00	500.00	0.00	500.00	0.00	500.00		500.00	
607.8310.0047	EMERGENCY REPAIRS	8,500.00	15,180.54	8,311.00	6,869.54	0.00	6,869.54		6,869.54	
607.8310.0048	OTHER OPERATING EXPENSES	3,000.00	3,000.00	2,413.05	586.95	15.00	571.95		571.95	
607.8310.0049	SERVICES-OTHR.DEPTS/GOVTS	8,800.00	8,800.00	6,187.62	2,612.38	0.00	2,612.38		2,612.38	
607.8310.0099	REPAIR RESERVE FUND	5,500.00	5,500.00	0.00	5,500.00	0.00	5,500.00		5,500.00	
607.9901.0099	TRANSFER TO DEBT FUND	13,450.00	13,450.00	13,450.00	0.00	0.00	0.00		0.00	
608.8310.0013	TEMPORARY LABOR	1,000.00	1,000.00	0.00	1,000.00	0.00	1,000.00		1,000.00	
608.8310.0020	EQUIPMENT	2,000.00	4,355.00	4,354.74	0.26	0.00	0.26		0.26	
608.8310.0040	CONTRACTUAL REPAIRS	50,000.00	58,119.71	55,104.77	3,014.94	325.00	2,689.94		2,689.94	
608.8310.0041	CHEMICAL EXPENSES	16,000.00	16,000.00	14,488.49	1,511.51	0.00	1,511.51		1,511.51	
608.8310.0042	UTILITIES EXPENSES	35,000.00	35,000.00	30,532.18	4,467.82	0.00	4,467.82		4,467.82	
608.8310.0043	INSURANCE EXPENDITURES	6,500.00	6,500.00	0.00	6,500.00	0.00	6,500.00		6,500.00	
608.8310.0044	ENGINEERING SERVICES	20,000.00	20,000.00	20,000.00	0.00	0.00	0.00		0.00	
608.8310.0045	OPER.&MAINT.CONTRACT	174,756.00	174,760.00	160,196.41	14,563.59	0.00	14,563.59		14,563.59	
608.8310.0046	PURCHASE OF WATER	1,000.00	1,000.00	0.00	1,000.00	0.00	1,000.00		1,000.00	
608.8310.0047	EMERGENCY REPAIRS	40,000.00	125,495.00	122,048.55	3,448.05	4,895.50	(1,447.45)	15,000.00	13,552.55	BR#14
608.8310.0048	OTHER OPERATING EXPENSES	8,000.00	8,000.00	4,865.67	3,134.33	30.00	3,104.33		3,104.33	
608.8310.0049	SERVICES-OTHR.DEPTS/GOVTS	55,000.00	47,804.00	47,803.04	0.96	0.00	0.96		0.96	
608.8310.0090	CONTINGENCY	8,000.00	0.00	0.00	0.00	0.00	0.00		0.00	
608.8310.0099	REPAIR RESERVE FUND	12,000.00	0.00	0.00	0.00	0.00	0.00		0.00	
608.9901.0099	TRANSFER TO DEBT FUND	280,000.00	280,000.00	280,000.00	0.00	0.00	0.00		0.00	
609.8310.0013	TEMPORARY LABOR	300.00	300.00	0.00	300.00	0.00	300.00		300.00	
609.8310.0020	EQUIPMENT	1,000.00	1,000.00	0.00	1,000.00	0.00	1,000.00		1,000.00	
609.8310.0040	CONTRACTUAL REPAIRS	10,500.00	10,488.00	10,728.44	(240.44)	0.00	(240.44)	2,000.00	1,759.56	BR#15
609.8310.0041	CHEMICAL EXPENSES	700.00	700.00	0.00	700.00	0.00	700.00		700.00	
609.8310.0042	UTILITIES EXPENSES	8,500.00	8,500.00	8,144.95	355.05	0.00	355.05		355.05	
609.8310.0043	INSURANCE EXPENDITURES	2,000.00	2,000.00	0.00	2,000.00	0.00	2,000.00		2,000.00	
609.8310.0044	ENGINEERING SERVICES	3,000.00	3,000.00	3,000.00	0.00	0.00	0.00		0.00	
609.8310.0045	OPER.& MAINT.CONTRACT	11,172.00	11,184.00	10,251.67	932.33	0.00	932.33		932.33	
609.8310.0047	EMERGENCY REPAIRS	25,000.00	25,000.00	10,695.60	14,304.40	0.00	14,304.40	(2,000.00)	12,304.40	BR#15
609.8310.0048	OTHER OPERATING EXPENSES	5,200.00	5,200.00	4,142.46	1,057.54	0.00	1,057.54		1,057.54	
609.8310.0049	SERVICES-OTHR.DEPTS/GOVTS	15,800.00	15,800.00	10,872.25	4,927.75	0.00	4,927.75		4,927.75	
609.8310.0090	CONTINGENCY	5,000.00	5,000.00	0.00	5,000.00	0.00	5,000.00		5,000.00	
609.8310.0099	REPAIR RESERVE FUND	14,500.00	14,500.00	0.00	14,500.00	0.00	14,500.00		14,500.00	
609.9901.0099	TRANSFER TO DEBT FUND	55,150.00	55,150.00	55,150.00	0.00	0.00	0.00		0.00	
610.8310.0013	TEMPORARY LABOR	300.00	300.00	0.00	300.00	0.00	300.00		300.00	
610.8310.0020	EQUIPMENT	2,500.00	1,500.00	1,451.58	48.42	0.00	48.42		48.42	
610.8310.0040	CONTRACTUAL REPAIRS	9,500.00	8,596.00	9,184.77	(588.77)	325.00	(913.77)	2,000.00	1,086.23	BR#16

TOWN OF CARMEL
BUDGET REVISIONS NOVEMBER 2015 - #2015/06

ACCOUNT #	ACCOUNT DESCRIPTION	ORIGINAL BUDGET	ADJUSTED BUDGET	YTD ACTUAL EXPENDED	YTD UNEXPENDED BALANCE	YTD ENCUMBERED	YTD AVAILABLE BALANCE	BUDGET ADJUSTMENT	NET BUDGET BALANCE	BUDGET REVISION #
610.8310.0042	UTILITIES EXPENSES	3,000.00	3,000.00	2,731.98	268.02	0.00	268.02	300.00	568.02	BR#16
610.8310.0043	INSURANCE EXPENDITURES	2,000.00	2,000.00	0.00	2,000.00	0.00	2,000.00		2,000.00	
610.8310.0044	ENGINEERING SERVICES	2,500.00	2,500.00	2,500.00	0.00	0.00	0.00		0.00	
610.8310.0047	EMERGENCY REPAIRS	15,000.00	52,584.00	47,133.23	5,450.77	0.00	5,450.77	(2,300.00)	3,150.77	BR#16
610.8310.0048	OTHER OPERATING EXPENSES	1,800.00	1,800.00	873.91	926.09	0.00	926.09		926.09	
610.8310.0049	SERVICES-OTHR.DEPTS/GOVTS	14,600.00	11,700.00	11,656.18	43.82	0.00	43.82		43.82	
610.8310.0090	CONTINGENCY	8,000.00	0.00	0.00	0.00	0.00	0.00		0.00	
610.8310.0099	REPAIR RESERVE FUND	7,800.00	0.00	0.00	0.00	0.00	0.00		0.00	
610.9901.0099	TRANSFER TO DEBT FUND	50,000.00	50,000.00	50,000.00	0.00	0.00	0.00		0.00	
610.9902.0099	TRANSFER TO OTHER FUND	46,500.00	46,500.00	46,500.00	0.00	0.00	0.00		0.00	
610.9903.0099	TRANSFER TO CWD 8 DEBT	3,500.00	3,500.00	3,500.00	0.00	0.00	0.00		0.00	
612.8310.0013	TEMPORARY LABOR	300.00	300.00	0.00	300.00	0.00	300.00		300.00	
612.8310.0020	EQUIPMENT	1,000.00	1,000.00	0.00	1,000.00	0.00	1,000.00		1,000.00	
612.8310.0040	CONTRACTUAL REPAIRS	35,000.00	44,745.83	26,391.64	18,354.19	290.14	18,064.05		18,064.05	
612.8310.0041	CHEMICAL EXPENSES	4,000.00	4,000.00	838.20	3,161.80	0.00	3,161.80		3,161.80	
612.8310.0042	UTILITIES EXPENSES	14,000.00	16,000.00	14,679.42	(679.42)	0.00	(679.42)	2,000.00	1,320.58	BR#17
612.8310.0043	INSURANCE EXPENDITURES	1,200.00	1,200.00	0.00	1,200.00	0.00	1,200.00		1,200.00	
612.8310.0044	ENGINEERING SERVICES	5,000.00	5,000.00	5,000.00	0.00	0.00	0.00		0.00	
612.8310.0045	OPER.& MAINT.CONTRACT	9,054.00	9,254.00	8,482.76	771.24	0.00	771.24		771.24	
612.8310.0046	PURCHASE OF WATER	0.00	10,114.00	10,114.00	0.00	0.00	0.00		0.00	
612.8310.0047	EMERGENCY REPAIRS	35,000.00	26,886.00	13,303.59	13,582.41	1,315.36	12,267.05	(2,000.00)	10,267.05	BR#17
612.8310.0048	OTHER OPERATING EXPENSES	6,200.00	6,200.00	2,152.61	4,047.39	16.00	4,031.39		4,031.39	
612.8310.0049	SERVICES-OTHR.DEPTS/GOVTS	14,500.00	14,500.00	13,218.36	1,281.64	0.00	1,281.64		1,281.64	
612.8310.0099	REPAIR RESERVE FUND	9,000.00	7,000.00	0.00	7,000.00	0.00	7,000.00		7,000.00	
612.9901.0099	TRANSFER TO DEBT FUND 887	4,120.00	4,120.00	4,120.00	0.00	0.00	0.00		0.00	
613.8310.0013	TEMPORARY LABOR	500.00	500.00	0.00	500.00	0.00	500.00		500.00	
613.8310.0020	EQUIPMENT	400.00	960.00	952.83	7.17	0.00	7.17		7.17	
613.8310.0040	CONTRACTUAL REPAIRS	1,500.00	9,223.00	6,028.98	3,194.02	0.00	3,194.02		3,194.02	
613.8310.0043	INSURANCE EXPENDITURES	1,200.00	1,200.00	0.00	1,200.00	0.00	1,200.00		1,200.00	
613.8310.0044	ENGINEERING SERVICES	1,500.00	1,500.00	1,500.00	0.00	0.00	0.00		0.00	
613.8310.0047	EMERGENCY REPAIRS	2,000.00	18,189.60	17,208.40	981.20	0.00	981.20		981.20	
613.8310.0048	OTHER OPERATING EXPENSES	700.00	700.00	234.20	465.80	0.00	465.80		465.80	
613.8310.0049	SERVICES-OTHR.DEPTS/GOVTS	6,950.00	6,390.00	3,896.15	2,493.85	0.00	2,493.85		2,493.85	
613.8310.0099	REPAIR RESERVE FUND	6,500.00	500.00	0.00	500.00	0.00	500.00		500.00	
613.9901.0099	TRANS TO DEBT SERVICE FD	61,525.00	61,525.00	61,525.00	0.00	0.00	0.00		0.00	
613.9902.0099	TRANS TO CWD #8	12,000.00	12,000.00	12,000.00	0.00	0.00	0.00		0.00	
613.9903.0099	CWD 8 DEBT FUND	8,250.00	8,250.00	8,250.00	0.00	0.00	0.00		0.00	
613.9904.0099	CWD10 DEBT FUND	4,070.00	4,070.00	4,070.00	0.00	0.00	0.00		0.00	
614.8310.0013	TEMPORARY LABOR	150.00	150.00	0.00	150.00	0.00	150.00		150.00	
614.8310.0020	EQUIPMENT	1,000.00	1,000.00	0.00	1,000.00	0.00	1,000.00		1,000.00	
614.8310.0040	CONTRACTUAL REPAIRS	10,000.00	9,992.00	1,796.80	8,195.20	650.00	7,545.20		7,545.20	
614.8310.0041	CHEMICAL EXPENSES	350.00	350.00	80.00	270.00	0.00	270.00		270.00	
614.8310.0042	UTILITIES EXPENSES	7,000.00	7,000.00	5,109.04	1,890.96	0.00	1,890.96		1,890.96	
614.8310.0043	INSURANCE EXPENDITURES	1,300.00	1,300.00	0.00	1,300.00	0.00	1,300.00		1,300.00	
614.8310.0044	ENGINEERING SERVICES	1,500.00	1,500.00	1,500.00	0.00	0.00	0.00		0.00	
614.8310.0045	OPER.& MAINT.CONTRACT	18,156.00	18,164.00	16,650.15	1,513.85	0.00	1,513.85		1,513.85	
614.8310.0047	EMERGENCY REPAIRS	18,000.00	18,000.00	5,123.50	12,876.50	793.36	12,083.14		12,083.14	
614.8310.0048	OTHER OPERATING EXPENSES	1,950.00	1,950.00	1,501.37	448.63	23.00	425.63		425.63	
614.8310.0049	SERVICES-OTHR.DEPTS/GOVTS	7,500.00	7,500.00	6,892.97	607.03	0.00	607.03		607.03	
614.8310.0099	REPAIR RESERVE FUND	7,000.00	7,000.00	0.00	7,000.00	0.00	7,000.00		7,000.00	
614.9901.0099	TRANS TO DEBT SERVICE FD	15,350.00	15,350.00	15,350.00	0.00	0.00	0.00		0.00	
622.8310.0040	CONTRACTUAL REPAIRS	0.00	1,350.00	0.00	1,350.00	0.00	1,350.00		1,350.00	
622.8310.0043	INSURANCE EXPENDITURES	1,500.00	1,500.00	0.00	1,500.00	0.00	1,500.00		1,500.00	
622.8310.0044	ENGINEERING SERVICES	3,000.00	3,000.00	3,000.00	0.00	0.00	0.00		0.00	

TOWN OF CARMEL
BUDGET REVISIONS NOVEMBER 2015 - #2015/06

ACCOUNT #	ACCOUNT DESCRIPTION	ORIGINAL BUDGET	ADJUSTED BUDGET	YTD ACTUAL EXPENDED	YTD UNEXPENDED BALANCE	YTD ENCUMBERED	YTD AVAILABLE BALANCE	BUDGET ADJUSTMENT	NET BUDGET BALANCE	BUDGET REVISION #
622.8310.0047	EMERGENCY REPAIRS	0.00	2,650.00	2,614.68	35.32	0.00	35.32		35.32	
622.8310.0048	OTHER OPERATING EXPENSES	500.00	21,500.00	21,878.43	(378.43)	0.00	(378.43)	400.00	21.57	BR#4
622.8310.0049	SERVICES-OTHR.DEPTS/GOVTS	23,000.00	23,000.00	22,702.39	297.61	0.00	297.61		297.61	
622.8310.0099	REPAIR RESERVE FUND	9,600.00	600.00	0.00	600.00	0.00	600.00	(400.00)	200.00	BR#4
622.9901.0099	TRANS TO CWD#2-O & M FD	206,871.00	206,871.00	206,871.00	0.00	0.00	0.00		0.00	
622.9902.0099	TRANSFER TO CWD#2-DEBT FD	15,900.00	15,900.00	15,900.00	0.00	0.00	0.00		0.00	
	SEWER DISTRICTS									
701.8130.0013	TEMPORARY LABOR	500.00	500.00	0.00	500.00	0.00	500.00		500.00	
701.8130.0020	EQUIPMENT	500.00	24,375.00	23,875.00	500.00	0.00	500.00		500.00	
701.8130.0040	CONTRACTUAL REPAIRS	12,000.00	65,774.00	61,098.25	4,675.75	937.13	3,738.62		3,738.62	
701.8130.0042	UTILITIES EXPENSES	1,500.00	1,500.00	722.02	777.98	0.00	777.98		777.98	
701.8130.0043	INSURANCE EXPENDITURES	750.00	750.00	0.00	750.00	0.00	750.00		750.00	
701.8130.0044	ENGINEERING SERVICES	2,500.00	2,500.00	2,500.00	0.00	0.00	0.00		0.00	
701.8130.0045	OPER & MAINT CONTRACT	7,514.00	7,740.00	7,094.67	645.33	0.00	645.33		645.33	
701.8130.0048	OTHR.OPERATING EXPENSES	1,285.00	1,285.00	720.00	565.00	0.00	565.00		565.00	
701.8130.0049	SERVICES-OTHR DEPTS/GOVTS	4,000.00	4,000.00	3,422.93	577.07	0.00	577.07		577.07	
701.8130.0099	REPAIR RESERVE APPROP	12,000.00	0.00	0.00	0.00	0.00	0.00		0.00	
702.8130.0013	TEMPORARY LABOR	2,000.00	2,000.00	0.00	2,000.00	0.00	2,000.00		2,000.00	
702.8130.0020	EQUIPMENT	20,000.00	152,733.94	110,506.25	42,227.69	39,062.69	3,165.00		3,165.00	
702.8130.0040	CONTRACTUAL REPAIRS	150,000.00	143,126.91	94,646.61	48,480.30	8,895.77	39,584.53	(500.00)	39,084.53	BR#18
702.8130.0041	CHEMICAL EXPENSES	60,000.00	40,000.00	0.00	40,000.00	0.00	40,000.00		40,000.00	
702.8130.0042	UTILITIES EXPENSES	220,000.00	215,000.00	188,818.02	26,181.98	0.00	26,181.98		26,181.98	
702.8130.0043	INSURANCE EXPENDITURE	36,500.00	36,500.00	0.00	36,500.00	0.00	36,500.00		36,500.00	
702.8130.0044	ENGINEERING SERVICES	57,250.00	56,050.00	55,500.00	550.00	0.00	550.00		550.00	
702.8130.0045	OPERATION & MAIN CONTRACT	348,232.00	358,679.00	328,789.01	29,889.99	0.00	29,889.99		29,889.99	
702.8130.0046	PURCHASE OF WATER	100.00	100.00	211.91	(111.91)	0.00	(111.91)	500.00	388.09	BR#18
702.8130.0047	WASTE DISP/SLUDGE HAULING	320,950.00	320,950.00	281,341.18	39,608.82	30,390.84	9,217.98		9,217.98	
702.8130.0048	OTHER OPERATING EXPENSES	25,000.00	25,000.00	19,641.89	5,358.11	607.00	4,751.11		4,751.11	
702.8130.0049	SERVICES-OTHR.DEPTS/GOVTS	165,000.00	165,000.00	164,367.90	632.10	0.00	632.10		632.10	
702.8130.0090	CONTINGENCY	20,000.00	20,000.00	0.00	20,000.00	0.00	20,000.00		20,000.00	
702.8130.0099	REPAIR RESERVE FUND	25,000.00	20,000.00	0.00	20,000.00	0.00	20,000.00		20,000.00	
702.8130.0140	MICRO-CONTRACTUAL REPAIRS	217,050.00	217,050.00	135,864.69	81,185.31	60,922.75	20,262.56		20,262.56	
702.8130.0141	MICRO-CHEMICAL EXPENSES	40,000.00	60,000.00	44,879.15	15,120.85	2,349.28	12,771.57		12,771.57	
702.8130.0142	MICRO-UTILITIES EXPENSE	10,000.00	15,000.00	12,718.30	2,281.70	0.00	2,281.70		2,281.70	
703.8130.0013	TEMPORARY LABOR	200.00	200.00	0.00	200.00	0.00	200.00		200.00	
703.8130.0040	CONTRACTUAL REPAIRS	3,800.00	3,800.00	0.00	3,800.00	0.00	3,800.00		3,800.00	
703.8130.0042	UTILITIES EXPENSES	1,000.00	1,000.00	940.90	59.10	0.00	59.10	400.00	459.10	BR#19
703.8130.0043	INSURANCE EXPENDITURES	120.00	120.00	0.00	120.00	0.00	120.00		120.00	
703.8130.0044	ENGINEERING SERVICES	1,500.00	1,500.00	1,500.00	0.00	0.00	0.00		0.00	
703.8130.0048	OTHER OPERATING EXPENSES	100.00	100.00	0.00	100.00	0.00	100.00		100.00	
703.8130.0049	SERVICES-OTHR.DEPTS/GOVTS	775.00	775.00	765.18	9.82	0.00	9.82		9.82	
703.8130.0099	REPAIR RESERVE FUND	1,825.00	1,825.00	0.00	1,825.00	0.00	1,825.00	(400.00)	1,425.00	BR#19
704.8130.0013	TEMPORARY LABOR	1,000.00	1,000.00	0.00	1,000.00	0.00	1,000.00		1,000.00	
704.8130.0020	EQUIPMENT	7,500.00	12,500.00	0.00	12,500.00	10,961.79	1,538.21		1,538.21	
704.8130.0040	CONTRACTUAL REPAIRS	33,000.00	28,079.00	9,863.43	18,215.57	3,876.20	14,339.37		14,339.37	
704.8130.0041	CHEMICAL EXPENSES	8,000.00	8,000.00	90.00	7,910.00	0.00	7,910.00		7,910.00	
704.8130.0042	UTILITIES EXPENSES	28,000.00	28,000.00	23,878.33	4,121.67	0.00	4,121.67		4,121.67	
704.8130.0043	INSURANCE EXPENDITURES	4,500.00	4,500.00	0.00	4,500.00	0.00	4,500.00		4,500.00	
704.8130.0044	ENGINEERING SERVICES	32,000.00	32,000.00	32,000.00	0.00	0.00	0.00		0.00	
704.8130.0045	OPERATION & MAIN.CONTRACT	164,031.00	168,952.00	154,872.63	14,079.37	0.00	14,079.37		14,079.37	
704.8130.0046	PURCHASE OF WATER	800.00	800.00	695.30	104.70	0.00	104.70		104.70	
704.8130.0047	WASTE DISP/SLUDGE HAULING	103,500.00	103,500.00	33,505.55	69,994.45	3,779.10	66,215.35		66,215.35	
704.8130.0048	OTHER OPERATING EXPENSES	5,785.00	5,785.00	5,916.60	(131.60)	0.00	(131.60)	1,000.00	868.40	BR#20
704.8130.0049	SERVICES-OTHR.DEPTS/GOVTS	50,000.00	50,000.00	49,513.84	486.16	0.00	486.16		486.16	

TOWN OF CARMEL
BUDGET REVISIONS NOVEMBER 2015 - #2015/06

ACCOUNT #	ACCOUNT DESCRIPTION	ORIGINAL BUDGET	ADJUSTED BUDGET	YTD ACTUAL EXPENDED	YTD UNEXPENDED BALANCE	YTD ENCUMBERED	YTD AVAILABLE BALANCE	BUDGET ADJUSTMENT	NET BUDGET BALANCE	BUDGET REVISION #
704.8130.0090	CONTINGENCY	5,000.00	5,000.00	0.00	5,000.00	0.00	5,000.00		5,000.00	
704.8130.0099	REPAIR RESERVE FUND	10,000.00	5,000.00	0.00	5,000.00	0.00	5,000.00	(1,000.00)	4,000.00	BR#20
704.8130.0140	MICRO-CONTRACTUAL REPAIRS	150,500.00	150,500.00	97,913.11	52,586.89	2,137.50	50,449.39		50,449.39	
704.8130.0141	MICRO-CHEMICAL EXPENSES	10,000.00	10,000.00	7,435.98	2,564.02	763.27	1,800.75		1,800.75	
704.8130.0142	MICRO-UTILITIES EXPENSE	30,000.00	30,000.00	6,906.25	23,093.75	0.00	23,093.75		23,093.75	
705.8130.0013	TEMPORARY LABOR	300.00	300.00	0.00	300.00	0.00	300.00		300.00	
705.8130.0020	EQUIPMENT	500.00	8,800.00	8,300.00	500.00	0.00	500.00		500.00	
705.8130.0040	CONTRACTUAL REPAIRS	10,000.00	9,879.00	6,341.14	3,537.86	0.00	3,537.86		3,537.86	
705.8130.0041	CHEMICAL EXPENSES	2,600.00	3,600.00	2,841.29	758.71	0.00	758.71		758.71	
705.8130.0042	UTILITIES EXPENSES	2,500.00	2,500.00	1,946.46	553.54	0.00	553.54		553.54	
705.8130.0043	INSURANCE EXPENDITURES	900.00	900.00	0.00	900.00	0.00	900.00		900.00	
705.8130.0044	ENGINEERING SERVICES	2,500.00	2,500.00	2,500.00	0.00	0.00	0.00		0.00	
705.8130.0045	OPERATION & MAIN CONTRACT	4,024.00	4,145.00	3,799.40	345.60	0.00	345.60		345.60	
705.8130.0046	PURCHASE OF WATER	645.00	797.30	609.20	188.10	0.00	188.10		188.10	
705.8130.0047	WASTE DISP/SLUDGE HAULING	38,000.00	38,000.00	23,193.30	14,806.70	2,074.80	12,731.90		12,731.90	
705.8130.0048	OTHER OPERATING EXPENSES	1,950.00	1,950.00	1,607.52	342.48	0.00	342.48		342.48	
705.8130.0049	SERVICES-OTHR.DEPTS/GOVTS	5,875.00	5,875.00	5,851.70	23.30	0.00	23.30		23.30	
705.8130.0099	REPAIR RESERVE FUND	7,800.00	6,800.00	0.00	6,800.00	0.00	6,800.00		6,800.00	
706.8130.0013	TEMPORARY LABOR	500.00	500.00	0.00	500.00	0.00	500.00		500.00	
706.8130.0020	EQUIPMENT	500.00	500.00	0.00	500.00	0.00	500.00		500.00	
706.8130.0040	CONTRACTUAL REPAIRS	17,000.00	16,225.00	4,240.84	11,984.16	0.00	11,984.16		11,984.16	
706.8130.0041	CHEMICAL EXPENSES	1,000.00	4,000.00	2,735.34	1,264.66	0.00	1,264.66		1,264.66	
706.8130.0042	UTILITIES EXPENSES	10,500.00	10,500.00	10,041.79	458.21	0.00	458.21		458.21	
706.8130.0043	INSURANCE EXPENDITURES	1,200.00	1,200.00	0.00	1,200.00	0.00	1,200.00		1,200.00	
706.8130.0044	ENGINEERING SERVICES	4,000.00	4,000.00	4,000.00	0.00	0.00	0.00		0.00	
706.8130.0045	OPERATION & MAIN.CONTRACT	25,847.00	26,622.00	24,403.06	2,218.94	0.00	2,218.94		2,218.94	
706.8130.0046	PURCHASE OF WATER	400.00	400.00	66.35	333.65	0.00	333.65		333.65	
706.8130.0047	WASTE DISP/SLUDGE HAULING	20,000.00	20,000.00	9,344.00	10,656.00	0.00	10,656.00		10,656.00	
706.8130.0048	OTHER OPERATING EXPENSES	3,000.00	3,000.00	2,538.52	461.48	0.00	461.48		461.48	
706.8130.0049	SERVICES-OTHR.DEPTS/GOVTS	7,800.00	7,800.00	7,421.79	378.21	0.00	378.21		378.21	
706.8130.0099	REPAIR RESERVE FUND	7,450.00	4,450.00	0.00	4,450.00	0.00	4,450.00		4,450.00	
707.8130.0013	TEMPORARY LABOR	300.00	300.00	0.00	300.00	0.00	300.00		300.00	
707.8130.0020	EQUIPMENT	2,000.00	4,345.66	2,935.90	1,409.76	0.00	1,409.76		1,409.76	
707.8130.0040	CONTRACTUAL REPAIRS	18,000.00	17,276.00	9,553.35	7,722.65	4,215.81	3,506.84		3,506.84	
707.8130.0041	CHEMICAL EXPENSES	2,000.00	2,000.00	(129.00)	2,129.00	0.00	2,129.00		2,129.00	
707.8130.0042	UTILITIES EXPENSES	15,500.00	15,500.00	8,683.46	6,816.54	0.00	6,816.54		6,816.54	
707.8130.0043	INSURANCE EXPENDITURE	2,000.00	2,000.00	0.00	2,000.00	0.00	2,000.00		2,000.00	
707.8130.0044	ENGINEERING SERVICES	18,000.00	78,000.00	39,526.24	38,473.76	38,473.76	0.00		0.00	
707.8130.0045	OPERATION &MAINT.CONTRACT	24,120.00	24,844.00	22,772.97	2,071.03	0.00	2,071.03		2,071.03	
707.8130.0046	PURCHASE OF WATER	360.00	444.27	272.00	172.27	187.73	(15.46)	100.00	84.54	BR#21
707.8130.0047	WASTE DISP/SLUDGE HAULING	22,500.00	22,500.00	17,537.00	4,963.00	1,482.00	3,481.00		3,481.00	
707.8130.0048	OTHER OPERATING EXPENSES	4,000.00	4,000.00	3,252.21	747.79	0.00	747.79		747.79	
707.8130.0049	SERVICE-OTHR.DEPTS/GOVTS	23,500.00	23,500.00	23,285.15	214.85	0.00	214.85	(100.00)	114.85	BR#21
707.8130.0090	CONTINGENCY	3,370.00	3,370.00	0.00	3,370.00	0.00	3,370.00		3,370.00	
707.8130.0099	REPAIR RESERVE FUND	10,300.00	300.00	0.00	300.00	0.00	300.00		300.00	
707.8130.0140	MICRO-CONTRACTUAL REPAIRS	122,500.00	122,500.00	96,747.35	25,752.65	723.80	25,028.85	(2,000.00)	23,028.85	BR#22
707.8130.0141	MICRO-CHEMICAL EXPENSES	8,720.00	8,720.00	5,130.40	3,589.60	0.00	3,589.60		3,589.60	
707.8130.0142	MICRO-UTILITIES EXPENSE	18,500.00	18,500.00	18,964.59	(464.59)	0.00	(464.59)	2,000.00	1,535.41	BR#22
708.8130.0013	TEMPORARY LABOR	300.00	300.00	0.00	300.00	0.00	300.00		300.00	
708.8130.0020	EQUIPMENT	5,000.00	5,000.00	0.00	5,000.00	0.00	5,000.00		5,000.00	
708.8130.0040	CONTRACTUAL REPAIRS	15,000.00	14,679.00	8,320.87	6,358.13	0.00	6,358.13		6,358.13	
708.8130.0041	CHEMICAL EXPENSES	2,300.00	2,300.00	0.00	2,300.00	0.00	2,300.00		2,300.00	
708.8130.0042	UTILITIES EXPENSES	6,000.00	6,000.00	4,346.30	1,653.70	0.00	1,653.70		1,653.70	
708.8130.0043	INSURANCE EXPENDITURE	4,000.00	4,000.00	0.00	4,000.00	0.00	4,000.00		4,000.00	

TOWN OF CARMEL
BUDGET REVISIONS NOVEMBER 2015 - #2015/06

ACCOUNT #	ACCOUNT DESCRIPTION	ORIGINAL BUDGET	ADJUSTED BUDGET	YTD ACTUAL EXPENDED	YTD UNEXPENDED BALANCE	YTD ENCUMBERED	YTD AVAILABLE BALANCE	BUDGET ADJUSTMENT	NET BUDGET BALANCE	BUDGET REVISION #
708.8130.0044	ENGINEERING SERVICES	6,000.00	6,000.00	6,000.00	0.00	0.00	0.00		0.00	
708.8130.0045	OPERATION &MAINT.CONTRACT	10,735.00	11,056.00	10,134.30	921.70	0.00	921.70		921.70	
708.8130.0047	WASTE DISP/SLUDGE HAULING	500.00	500.00	0.00	500.00	0.00	500.00		500.00	
708.8130.0048	OTHER OPERATING EXPENSES	1,062.00	1,062.00	613.49	448.51	0.00	448.51		448.51	
708.8130.0049	SERVICE-OTHR.DEPTS/GOVTS	25,520.00	25,520.00	25,434.32	85.68	0.00	85.68		85.68	
708.8130.0099	REPAIR RESERVE FUND	5,500.00	5,500.00	0.00	5,500.00	0.00	5,500.00		5,500.00	
708.9901.0099	TRANSFER TO CSD#2-O&M FD.	211,159.00	211,159.00	211,159.00	0.00	0.00	0.00		0.00	
713.8130.0013	TEMPORARY LABOR	500.00	500.00	0.00	500.00	0.00	500.00		500.00	
713.8130.0020	EQUIPMENT	1,000.00	1,000.00	0.00	1,000.00	0.00	1,000.00		1,000.00	
713.8130.0040	CONTRACTUAL REPAIRS	6,000.00	5,549.00	4,788.90	760.10	99.00	661.10		661.10	
713.8130.0041	CHEMICAL EXPENSE	3,000.00	3,000.00	0.00	3,000.00	0.00	3,000.00		3,000.00	
713.8130.0042	UTILITIES EXPENSES	4,600.00	4,600.00	3,941.68	658.32	0.00	658.32		658.32	
713.8130.0043	INSURANCE EXPENDITURES	2,700.00	2,700.00	0.00	2,700.00	0.00	2,700.00		2,700.00	
713.8130.0044	ENGINEERING SERVICES	1,500.00	1,500.00	1,500.00	0.00	0.00	0.00		0.00	
713.8130.0045	OPER & MAINT CONTRACT	15,041.00	15,492.00	14,200.34	1,291.66	0.00	1,291.66		1,291.66	
713.8130.0048	OTHR.OPERATING EXPENSES	5,950.00	5,950.00	4,871.92	1,078.08	0.00	1,078.08		1,078.08	
713.8130.0049	SERVICES-OTHR.DEPTS/GOVTS	6,800.00	6,800.00	6,067.11	732.89	0.00	732.89		732.89	
713.8130.0099	REPAIR RESERVE APPROP	4,000.00	4,000.00	0.00	4,000.00	0.00	4,000.00		4,000.00	
751.5182.0040	CONTRACTUAL EXPENDITURES	1,000.00	1,000.00	0.00	1,000.00	0.00	1,000.00		1,000.00	
751.5182.0042	CONTRACTUAL UTILITIES	116,000.00	116,000.00	90,476.99	25,523.01	0.00	25,523.01		25,523.01	
751.5182.0043	INSURANCE EXPENDITURE	1,200.00	1,200.00	0.00	1,200.00	0.00	1,200.00		1,200.00	
751.5182.0048	OTHER EXPENSES	1,000.00	1,000.00	396.44	603.56	0.00	603.56		603.56	
751.5182.0049	SERVICES-OTHR.DEPTS/GOVTS	4,600.00	4,600.00	4,384.00	216.00	0.00	216.00		216.00	
752.5182.0040	CONTRACTUAL EXPENDITURES	3,000.00	3,000.00	2,518.45	481.55	0.00	481.55		481.55	
752.5182.0042	CONTRACTUAL UTILITIES	35,000.00	35,000.00	27,323.10	7,676.90	0.00	7,676.90		7,676.90	
752.5182.0043	INSURANCE EXPENDITURE	400.00	400.00	0.00	400.00	0.00	400.00		400.00	
752.5182.0048	OTHER EXPENSES	3,000.00	3,000.00	896.66	2,103.34	0.00	2,103.34		2,103.34	
752.5182.0049	SERVICES-OTHR.DEPTS/GOVTS	1,500.00	1,500.00	1,457.00	43.00	0.00	43.00		43.00	
753.5182.0042	CONTRACTUAL UTILITIES	3,800.00	3,750.00	2,723.39	1,026.61	0.00	1,026.61		1,026.61	
753.5182.0043	INSURANCE EXPENDITURE	120.00	120.00	0.00	120.00	0.00	120.00		120.00	
753.5182.0049	SERVICES-OTHR.DEPTS/GOVTS	150.00	200.00	192.00	8.00	0.00	8.00		8.00	
754.5182.0042	CONTRACTUAL UTILITIES	5,500.00	5,400.00	4,094.30	1,305.70	0.00	1,305.70		1,305.70	
754.5182.0043	INSURANCE EXPENDITURE	120.00	120.00	0.00	120.00	0.00	120.00		120.00	
754.5182.0049	SERVICES-OTHR.DEPTS/GOVTS	190.00	290.00	244.00	46.00	0.00	46.00		46.00	
755.5182.0042	CONTRACTUAL UTILITIES	3,200.00	3,150.00	2,275.35	874.65	0.00	874.65		874.65	
755.5182.0043	INSURANCE EXPENDITURE	120.00	120.00	0.00	120.00	0.00	120.00		120.00	
755.5182.0049	SERVICES-OTHR.DEPTS/GOVTS	130.00	180.00	174.00	6.00	0.00	6.00		6.00	
	CAPITAL FUNDS									
900.1989.0012	PROJECT LABOR OVERTIME	0.00	26,685.09	17,282.64	9,402.45	0.00	9,402.45	(9,500.00)	5,902.45	BR#23
900.1989.0040	CONTRACTUAL EXPENDITURES	0.00	191,809.05	199,150.00	(7,340.95)	0.00	(7,340.95)	7,500.00	159.05	BR#23
900.1989.0048	OTHER PROJECT EXPENDITURE	0.00	5,854.60	2,189.97	3,664.63	0.00	3,664.63	(2,000.00)	1,664.63	BR#23
900.1989.0080	FICA & EMPLOY BENEFIT EXP	0.00	4,592.21	1,376.57	3,215.64	0.00	3,215.64	(2,000.00)	1,215.64	BR#23
902.1989.0012	OVERTIME	0.00	5,731.04	0.00	5,731.04	0.00	5,731.04		5,731.04	
902.1989.0020	CONTRACTUAL EQUIPMENT	0.00	15,000.00	0.00	15,000.00	0.00	15,000.00		15,000.00	
902.1989.0040	CONTRACTUAL EXPENSES	0.00	154,041.71	0.00	154,041.71	0.00	154,041.71		154,041.71	
902.1989.0044	PROJECT ENGINEERING	0.00	44,821.00	0.00	44,821.00	0.00	44,821.00		44,821.00	
902.1989.0046	SPECIAL CONSULTING SVCES	0.00	3,960.51	0.00	3,960.51	0.00	3,960.51		3,960.51	
902.1989.0048	OTHER PROJECT EXPENDITURE	0.00	2,371.00	1,991.65	379.35	0.00	379.35		379.35	
902.1989.0082	SOCIAL SECURITY	0.00	404.07	0.00	404.07	0.00	404.07		404.07	
903.1989.0020	EQUIPMENT	0.00	11,806.26	0.00	11,806.26	0.00	11,806.26		11,806.26	
903.1989.0046	SPECIAL CONSULTING SVCES	0.00	1,306.71	0.00	1,306.71	0.00	1,306.71		1,306.71	
903.1989.0048	OTHER PROJECT EXPENDITURE	0.00	4,938.31	1,563.09	3,375.22	0.00	3,375.22		3,375.22	
904.1989.0040	CONTRACTUAL EXPENSES	0.00	2,275.00	2,275.00	0.00	0.00	0.00		0.00	
909.1989.0040	CONTRACTUAL EXPENDITURES	0.00	26,381.22	1,552.82	24,828.40	0.00	24,828.40		24,828.40	

TOWN OF CARMEL
BUDGET REVISIONS NOVEMBER 2015 - #2015/06

ACCOUNT #	ACCOUNT DESCRIPTION	ORIGINAL BUDGET	ADJUSTED BUDGET	YTD ACTUAL EXPENDED	YTD UNEXPENDED BALANCE	YTD ENCUMBERED	YTD AVAILABLE BALANCE	BUDGET ADJUSTMENT	NET BUDGET BALANCE	BUDGET REVISION #
909.1989.0045	IMPROVEMENT CONTRACTS	0.00	200,000.00	0.00	200,000.00	0.00	200,000.00		200,000.00	
910.7140.0040	CONTRACTUAL EXPENDITURES	0.00	16,779.15	0.00	16,779.15	0.00	16,779.15		16,779.15	
910.7140.0044	PROJECT ENGINEERING	0.00	2,057.00	0.00	2,057.00	0.00	2,057.00		2,057.00	
911.7140.0020	PARK EQUIPMENT	0.00	3,382.00	0.00	3,382.00	0.00	3,382.00		3,382.00	
911.7140.0040	CONTRACTUAL EXPENDITURES	0.00	1,116.97	0.00	1,116.97	0.00	1,116.97		1,116.97	
911.7140.0045	CONTRACTED IMPROVEMENTS	0.00	306,404.50	24,394.50	282,010.00	0.00	282,010.00		282,010.00	
911.7140.0048	OTHER PROJECT EXPENDITURE	0.00	629.56	29.35	600.21	0.00	600.21		600.21	
911.7140.0049	SERVICES-OTHR DEPTS/GOVTS	0.00	1,263.97	0.00	1,263.97	0.00	1,263.97		1,263.97	
915.7140.0040	CONTRACTUAL EXPENDITURES	0.00	0.00	8,353.60	(8,353.60)	0.00	(8,353.60)	8,500.00	146.40	BR#24
915.7140.0044	PROJECT ENGINEERING	0.00	211,640.00	12,020.00	199,620.00	0.00	199,620.00	(8,500.00)	191,120.00	BR#24
950.5112.0012	PROJECT OVERTIME	0.00	33,141.09	4,441.90	28,699.19	0.00	28,699.19	(15,000.00)	13,699.19	BR#25
950.5112.0045	CONTRACTED PAVING SVCES	0.00	938,684.53	955,141.43	(20,456.90)	0.00	(20,456.90)	25,000.00	4,543.10	BR#25
950.5112.0048	OTHER PROJECT EXPENDITURE	0.00	39,673.60	19,067.17	20,606.43	0.00	20,606.43	(5,000.00)	15,606.43	BR#25
950.5112.0080	EMPLOYEE BENEFIT	0.00	5,000.00	0.00	5,000.00	0.00	5,000.00	(5,000.00)	0.00	BR#25
950.5112.0082	SOCIAL SECURITY BENEFITS	0.00	2,701.49	351.23	2,350.26	0.00	2,350.26		2,350.26	
951.5130.0024	PURCHASE OF HWY MACHINERY	0.00	273,506.17	27,028.15	246,478.02	0.00	246,478.02		246,478.02	
951.5130.0048	OTHER PROJECT EXPENITURE	0.00	20,000.00	11,090.55	8,909.45	0.00	8,909.45		8,909.45	
952.5112.0040	CONTRACTUAL EXPENSES	0.00	14,628.00	3,228.29	11,399.71	6,360.00	5,039.71		5,039.71	
952.5112.0048	OTHER PROJECT EXPENSES	0.00	3,000.00	2,977.11	22.89	0.00	22.89		22.89	
955.5112.0012	PROJECT OVERTIME	0.00	30,000.00	0.00	30,000.00	0.00	30,000.00		30,000.00	
955.5112.0040	GENERAL EXPENDITURES	0.00	200,000.00	0.00	200,000.00	0.00	200,000.00		200,000.00	
955.5112.0044	PROJECT ENGINEERING	0.00	484,000.00	130,499.11	353,500.89	0.00	353,500.89		353,500.89	
955.5112.0045	CONTRACTED PAVING SVCES	0.00	900,000.00	0.00	900,000.00	0.00	900,000.00		900,000.00	
955.5112.0048	OTHER PROJECT EXPENDITURE	0.00	63,772.86	1,225.00	62,547.86	0.00	62,547.86		62,547.86	
955.5112.0082	SOCIAL SECURITY BENEFITS	0.00	10,000.00	0.00	10,000.00	0.00	10,000.00		10,000.00	
962.8310.0040	CONTRACTUAL EXPENDITURES	0.00	11,232.40	0.00	11,232.40	0.00	11,232.40		11,232.40	
962.8310.0044	PROJECT ENGINEERING	0.00	400.00	0.00	400.00	0.00	400.00		400.00	
962.8310.0048	OTHER PROJECT EXPENSES	0.00	3,356.00	1,218.39	2,137.61	0.00	2,137.61		2,137.61	
965.8310.0040	CONTRACTUAL EXPENDITURES	0.00	5,042.00	0.00	5,042.00	0.00	5,042.00		5,042.00	
966.8310.0040	CONTRACTUAL EXPENDITURES	0.00	10,749.76	1,758.71	8,991.05	0.00	8,991.05		8,991.05	
968.8310.0040	CONTRACTUAL EXPENDITURES	0.00	950.72	0.00	950.72	0.00	950.72		950.72	
968.8310.0044	PROJECT ENGINEERING	0.00	76.05	0.00	76.05	0.00	76.05		76.05	
968.8310.0045	CONTRACT IMPROVEMENTS	0.00	(0.09)	0.00	(0.09)	0.00	(0.09)		(0.09)	
968.8310.0048	OTHER PROJECT EXPENSES	0.00	28,751.52	378.94	28,372.58	0.00	28,372.58		28,372.58	
969.8310.0040	CONTRACTUAL EXPENDITURES	0.00	443.00	0.00	443.00	0.00	443.00		443.00	
971.8130.0044	PROJECT ENGINEERING	0.00	0.00	0.00	0.00	158,712.00	(158,712.00)		(158,712.00)	
972.8130.0048	OTHER LEGAL EXPENSES	0.00	(262.50)	0.00	(262.50)	0.00	(262.50)		(262.50)	
974.8130.0144	UPGRADE ENGINEERING	0.00	(4,436.23)	0.00	(4,436.23)	0.00	(4,436.23)		(4,436.23)	
974.8130.0145	CONTRACT IMPROVEMENTS	0.00	(314,509.75)	0.00	(314,509.75)	0.00	(314,509.75)		(314,509.75)	
974.8130.0148	OTHER LEGAL EXPENSES	0.00	(437.50)	0.00	(437.50)	0.00	(437.50)		(437.50)	
977.8130.0044	UPGRADE ENGINEERING	0.00	8,443.10	0.00	8,443.10	0.00	8,443.10		8,443.10	
977.8130.0045	CONTRACTUAL IMPROVEMENTS	0.00	(57,387.46)	0.00	(57,387.46)	0.00	(57,387.46)		(57,387.46)	
977.8130.0048	OTHER PROJECT EXPENSES	0.00	(3,587.50)	0.00	(3,587.50)	0.00	(3,587.50)		(3,587.50)	
990.0037.0099	INTERFUND TRANS.PARKLAND	5,000.00	5,000.00	5,000.00	0.00	0.00	0.00		0.00	
990.9000.0099	INTERFUND TRANSFERS-OTHER	2,000.00	2,000.00	0.00	2,000.00	0.00	2,000.00		2,000.00	

☑ Work Session 12/9/15 #2

☐ Agenda

Pasquerello,Anne

From: Maxwell,Mary Ann
Sent: Wednesday, December 02, 2015 4:47 PM
To: Pasquerello,Anne
Subject: 12/9/15 Work Session - 2016 Proposed User Fee Schedule
Attachments: Proposed User Fee Schedule 2016.pdf; Recreation 2016 Proposed Fee Schedule.pdf; Boards User Fee schedule for 2016.doc

Attached is the 2016 Proposed User Fee Schedule. The only proposed changes were in the Recreation Department for Non-Residents Fees (also attached). There were no proposed changes in the following departments:

- Town Clerk
- Police Department
- Highway Department
- ECB, Zoning, Planning
- The Architectural Review Fee section was moved under the Planning Board

Mary Ann Maxwell
Town Comptroller
Town of Carmel
(845) 628-1500 ext 175
Fax (845) 628-7085
mam@ci.carmel.ny.us

TOWN OF CARMEL "PROPOSED" USER SERVICE FEES --
FISCAL YEAR 2016

FEE DESCRIPTION	2015 ADOPTED USER FEES	
TOWN CLERK'S OFFICE		
Certification:		
Registrar's Certification (Birth/Death)	10.00	
Town Clerks Certification (Marriage/Other)	10.00	
Genealogy Fee Schedule:	1 - 3 years - $22.00	
	4 - 10 years - $42.00	
	11 - 20 years - $62.00	
	21 - 30 years - $82.00	
	31 - 40 years - $102.00	
	41 - 50 years - $122.00	
	51 - 60 years - $142.00	
	61 - 70 years - $162.00	
Copies:		
Copies of Town Ordinance or Other Documents - Per Page	0.25	
Facsimile/Fax - Per Page	2.00	
Map (Zoning, Election, Other) - Black & White/Color	10.00/15.00	
Licenses:		
Auctioneering License - Annual	300.00	
Auctioneering License - One Day	150.00	
Annual Dog License Fee - spayed/nuetered	7.50	
Annual Dog License Fee - unspayed/un-nuetered	15.50	
Garbage Carting License - Renewal *	2,000.00	* Plus $150 per truck inspection annually
Garbage Carting License - NEW *	2,500.00	* Plus $150 per truck inspection annually
Marriage License	40.00	
Peddling License - 3 Months	500.00	
Miscellaneous:		
Cemetery Grave Marker - Each	100.00	
Dog Pick-Up	50.00	
Dog Shelter Fee - First Impoundment	25.00	+ 10.00 Each Additional 24 Hours
Second Impoundment - within one year	35.00	+ 10.00 Each Additional 24 Hours
Third Impoundment - within one year	45.00	+ 10.00 Each Additional 24 Hours
Subsequent Impoundment - within one year		
Petition to Amend Zoning Ordinance	1,500.00	
Permits:		
Canvassing/Soliciting Permit - 3 Months	350.00	
Public Assembly Permit - Each Event	200.00	
Sound Amplification Permit Commercial	100.00	
Sound Amplification Permit Residential	50.00	
Town Code:		
Annual Town Code Book Supplement	75.00	
Code Book	300.00	
Freshwater Wetlands Chapter Pamphlet	35.00	
Street Specifications	10.00	
Subdivision of Land Ordinance Pamphlet	35.00	
Vehicle and Traffic Chapter Pamphlet	25.00	
Zoning Chapter Pamphlet	35.00	

TOWN OF CARMEL "PROPOSED" USER SERVICE FEES -- FISCAL YEAR 2016

FEE DESCRIPTION	2015 ADOPTED USER FEES	
POLICE DEPARTMENT		
Accident Report - Business	0.25	per page
Accident Report - Personal	0.25	per page
Finger Printing Service - Non Residents - Per Person	35.00	
Photograph	20.00	per photo
Police Special Escort Service - Per Hour	-	
Special Event or Special Services - Per Hour	-	
CD of Photographs from Casefile	50.00	
Tow License Fee	1,500.00	Annual License Fee
Vehicle Impound Fee	100.00	per vehicle
ALARM ORDINANCE		
Alarm Permit - 1 Year - Residential & Commercial	40.00	
One False Alarm	-	
Two False Alarms	-	* All alarm fees: 10% of outstanding balance after 90 days past due.
Three False Alarms	25.00	
Four False Alarms	50.00	
Five False Alarms	100.00	
Six-Nine False Alarms	200.00	
Ten or more False Alarms	225.00	
HIGHWAY DEPARTMENT		
Driveway Bond - "Refundable"	750.00	
Driveway Permit - Includes two inspections	215.00	
Road Opening Bond - "Refundable" - Entire Road	1,000.00	
Road Opening Bond - "Refundable" - Half Road	500.00	
Road Opening Permit	215.00	

TOWN OF CARMEL "PROPOSED" USER SERVICE FEES --
FISCAL YEAR 2016

FEE DESCRIPTION	2015 ADOPTED USER FEES	
PARKS & RECREATION DEPARTMENT		
Camp:		
Playground Camp	460.00	Non-Resident $920.00
* Early Bird Registration Fee - Playground Camp	410.00	Non-Resident $820.00
Primary Camp [9:30 AM to 2:30 PM]	510.00	Non-Resident 1,020.00
* Early Bird Registration Fee - Primary Camp	460.00	Non-Resident $920.00
Primary Camp Extended Day [2:30 PM to 4:30 PM]	190.00	
Classes/Lessons:		
Additional Swimming Lessons	$70	Residents only
Adult Classes	$65.00 - $320.00	* plus $35.00 non residents
CPR Review	$70	Non-Resident $105.00
Lifeguard Training Aid/Safety	$375.00	Non-Resident $410.00
Lifeguard Training Review	$190.00	Non-Resident $225.00
Pre School Classes	FREE - $175.00	* plus $35.00 non residents
RTE - Responding to Emergencies	220.00	Non-Resident $255.00
Special Tennis, Aerobics, or Other Lessons	Cost	* plus $35.00 non residents
Swimming Lessons Including Permit	140.00	Residents only
Tennis Lessons - 6 One Hour Sessions	70.00	Non-Resident $105.00
Tennis Lessons - 8 One Hour Sessions	90.00	Non-Resident $125.00
Facilities Rental:		
Ballfield Rental - 2 Hour Limit	$150.00/$250.00 w/lights	
Boat Rental Fee	4.00 - 7.00	
Civic Building Rental/Pavilion	200.00	+Supervisor Hourly Rate
Group Picnic	150.00	Residents Only
Private Building Rental	300.00	+Supervisor Hourly Rate
Sycamore Park Concession [Seasonal]	3,500.00	
ID/Permits:		
Beach Guest Card	50.00	
Adult Swimming Permit	100.00	
Daily Adult Beach Fee	8.00	
Daily Adult Guest Beach Fee	10.00	
Daily Youth Beach Fee	7.00	
Daily Youth Guest Beach Fee	9.00	
Family Swimming Permit	200.00	
Family Tennis Permit	80.00	
Identification Card	6.00	
Senior Citizen Identification Card	No charge	
Nanny Identification Card	12.00	
Nanny Swim Permit	100.00	
Individual Tennis Permit	50.00	
Tennis Guest Fee	6.00	
Youth Swimming Permit	80.00	
Dog Park:		
Sycamore Dog Park User Fee - Resident	25.00	Annual
Sycamore Dog Park User Fee - Non-Resident	75.00	Annual

TOWN OF CARMEL "PROPOSED" USER SERVICE FEES --
FISCAL YEAR 2016

FEE DESCRIPTION	2015 ADOPTED USER FEES	
BUILDING & CODES DEPARTMENT		
Accessory Apartment Permit	400.00	
Bed & Breakfast Special Application	400.00	
Building Permits -- Flat Rate PLUS Estimated Cost of Construction	50.00	Flat Rate PLUS
Estimated Cost of Construction -- Calculated as:	12.00	per $1,000 Calculated Estimated Cost
Residential -- New construction	100.00	per sq. ft.
Residential -- Finish existing space to living space	20.00	per sq, ft.
Commercial	150.00	per sq. ft.
Commercial - Garage	75.00 - 80.00	per sq. ft.
Decks	35.00	per sq. ft.
Garage	75.00	per sq. ft.
Shed	25.00	per sq. ft.
Certificates of Compliance	80.00/150.00	Residential/Commercial
Certificates of Occupancy	80.00/150.00	Residential/Commercial
Excavation or Fill Permit for the first 2,000 cubic yards	200.00	Plus $100 for each additional 1,000 CY
Inspection Fee for Clearance of Title Search Violation	50.00	Each Inspection
Mother/Daughter Permit	200.00	
Plumbing Permit Per Fixture	15.00 each	$75.00 minimum fee
Plumbing/ Air Conditioning Inspection		
Re-Inspection Fee When Inspection Requested but Job Not Ready	50.00	Paid in Advance of 2nd Inspection
Sign Permit	150.00	
Swimming Pool Permit - Above Ground	150.00	
Swimming Pool Permit - In Ground	300.00	
HVAC Fee	50.00	Flat Rate plus
	10.00	per $1,000 Estimated Cost of Installation
Title Search	100.00/200.00	Residential/ Commercial + $100 per establishment
Zoning Letter	75.00	
Outdoor Dinning Annual Fee	100.00	Annual Fee
Outdoor Dinning (fee per 10 or more seats)	+ 50.00/up to 10 seats	An add'l $50.00 for 11 or more seats
Fire Inspection: Multifamily / Commercial	150.00 / 100.00	Commercial $100 per establishment
Blasting Permit	100.00	per month
Operational Permits *	100.00	
* (NYSDOS requires towns to issue permits for storage of certain materials and certain uses)		
Natural Gas Inspections		
Residential	50.00	(5 Fixtures) $10 each additional
Commercial	100.00	(5 Fixtures) $20 each additional
Liquid Propane Gas Inspections		
Residential	50.00	(5 Fixtures) - $10 each additional
Commercial	100.00	(5 Fixtures) - $20 each additional

TOWN OF CARMEL "PROPOSED" USER SERVICE FEES --
FISCAL YEAR 2016

FEE DESCRIPTION	2015 ADOPTED USER FEES	
ENVIRONMENTAL CONSERVATION REVIEW BOARD		
ECB Wetlands Sign	10.00	
Permit Renewal/Extension Fee	50.00	For each one year permit renewal/extension
Application Withdrawal	50.00	
Letter of Maintenance	50.00	
Letter of Permission (In lieu of application)	100.00	
Major Interagency Review - Over 5 Acres - Per Acre or Part Thereof	60.00	Total Wetland Include. 100' Control Area
Minor Interagency Review - Up to 5 Acres - Per Acre or Part Thereof	50.00	Total Wetland Include. 100' Control Area
Private Consultation/Conference with Wetland Inspector Per Hour	100.00	
Public Hearing	minimum $150.00 or cost	
SEQR - DEIS	1%	of Bond
Site Plan Inspection - Single Lot - Per Acre or Part Thereof	300.00	Total Wetland Include. 100' Control Area
Subdivision Plan Inspection - Per Acre or Part Thereof	300.00	Total Wetland Include. 100' Control Area
Tree Cutting - Up to 25 Acres	300.00	+ 25.00 acre and ind. monitoring of escrow fees
Tree Cutting - Over 25 Acres	300.00	+ 75.00 acre and ind. monitoring of escrow fees
Minor Wetland Permit Application - for projects disturbing 1,000 sq ft in the 100 ft buffer area.	225.00	
* Escrow Fee for Minor Project	500.00	*as determined by the Town's Wetland Inspector
Major Wetland Permit Application - for projects disturbing 1,000 sq ft in the 100 ft buffer area or any disturbance in the buffer.	500.00	*plus $100 for each add't 1,000 sq ft disturbance (or part thereof) in the 100 ft buffer. Maximum fee $1,000
* Escrow Fee for Major Project	1,000.00	*as determined by the Town's Wetland Inspector
Wetland Determination for Health Dept	150.00	
ZONING BOARD OF APPEALS		
280A Exemption	400.00	
Accessory Apartment Application	250.00	
Application Withdrawal	100.00	
Area Variance Application	200.00	
Bed and Breakfast Special Permit Application	400.00	
Interpretation of Ordinance	400.00	
Use Variance Application	400.00	
Computer address labels for variance mailing	25.00	
NOTIFICATION SIGN	25.00	
PLANNING BOARD		
PLANNING SUBDIVISION FEES:		
Sketch fee	500.00	One time fee
Preliminary Fees		
Major Subdivision	3,000.00	Plus $750 per lot
Minor Subdivision	2,500.00	Plus $750 per lot
"Extension of Preliminary Sub-division"	500.00	
Final Fees:		
Amendment to Final Plat	1,500.00	
Major Subdivision	1,500.00	Plus $500 per lot
Minor Subdivision	1,500.00	Plus $500 per lot
Re-approval of Final Approval	1,500.00	(Does not include SEQR fees)
Extension of final approval	1,000.00	
OPEN DEVELOPMENT REVIEW FEE	2,500.00	
LOT LINE ADJUSTMENT FEE	2,500.00	

TOWN OF CARMEL "PROPOSED" USER SERVICE FEES -- FISCAL YEAR 2016

FEE DESCRIPTION	2015 ADOPTED USER FEES	
SITE PLAN FEES:		
Commercial Site Plan -- Flat Rate PLUS Parking Spaces	2,000.00	Plus $100 per Parking Spaces
Residential Site Plan -- Flat Rate PLUS Unit Fee	3,000.00	PLUS $500 per Dwelling Unit
Amendment to Previous Approved Site Plan -- with no new parking spaces	3,000.00	
Amendment to Previous Approved Site Plan -- with new parking spaces	3,000.00	Plus $100 per Parking Spaces
Re-grant of Site Plan Approval	1,500.00	
Extension of Site Plan Approval	1,000.00	
SPECIAL SITE PLAN FEES		
Boat House/Bathhouse	800.00	
Parking Lot	800.00	
Pools/Tennis Courts/ Playgrounds	800.00	
Residential Barns	800.00	
Residential Dock	800.00	
Residential Horse Riding Ring	800.00	
Home Office	800.00	
LANDFILL, SURFACE GRADING,& OTHER EXCAVATION		
Up to 5 Acres	300.00	
Over 5 Acres	300.00	Plus $40.00/Acre
ARCHITECTURAL REVIEW		
New Commercial Structure Review	225.00	
Modification to Existing Commercial Structure Review	150.00	
Other Structure or Sign Review	50.00	
Single Family Residential Structure Review	100.00	
Two or More Family Residential Structure Review	100.00	Plus 50.00 each Additional Unit over two
PLANNING/MISCELLANEOUS FEES:		
Engineering Fee (Site Plans & Subdivisions) - Technical Review and Construction Inspections	5%	% of Bond Amount
Public Hearings Including Bond Returns and Reductions	175.00	Per Hearing
Planning Board SEQR Escrow Fees - DEIS	2.00%	Not to exceed 2% of Project Value
Planning Board SEQR Escrow Fees - FEIS	2.00%	Not to exceed 2% of Project Value
Recreation Fee in Lieu of Parklands	7,500.00	Per Residential Lot
Recreation Fee Sr. Cit. Multi Family Dwelling/Apt.	3,500.00	Per Dwelling/Apartment for site plan with approvals originating prior to 12/31/15
Recreation Fee Sr. Cit. Multi Family Dwelling/Apt.	4,500.00	Per Dwelling/Apartment for site plan with approvals originating after 1/1/16
Recreation Fee Multi Family Developments	5,000.00	Per Dwelling
Computer address labels	25.00	
NOTIFICATION SIGN	35.00	

TOWN OF CARMEL "PROPOSED" USER SERVICE FEES -- FISCAL YEAR 2016

FEE DESCRIPTION	2015 ADOPTED USER FEES	
DEPARTMENT MISCELLANEOUS TOWN SERVICES:		
Computer Labels	0.05	Each Label - 5.00 Minimum
Computer Report of Tax Parcels	0.25	Per Page - 5.00 Minimum
Copies of Plans/Maps - 24" x 36"	10.00	
Copies of Records/Documents	0.25	Per Page
Mail Reminder Notices	2.00	
Returned Deposited Bad Check - Each Item	20.00	
Tax or Record Search and Copy	5.00	
Tax or Record Search and Copy with Letter	10.00	
Banner Permit Fee (non-waivable)	400.00	* Fee for each banner issued under permit - Revised 4/2015
SPECIAL DISTRICTS		
PARK DISTRICTS:		
Building Rental - District Resident	150.00	
Building Rental - Non-District Resident	N/A	
Building Rental Deposit - "Refundable"	150.00	
Building Rental Cleaning Fee	100.00	
SEWER DISTRICTS:		
Sewer System Service Application, including one inspection	250.00	Residential
(where Street Lateral to Curb Line exists)	500.00	Commercial
Sewer System Connection Additional Inspection - Each Inspection	50.00	
Sewer Sludge Dumping Fee, each 1000 gallons	200.00	
Out of District Application Fee - Residential/Commercial	1,000.00	
WATER DISTRICTS:		
Water System Service Application, including one inspection	250.00	Residential
(where water line curb box exists)	500.00	Commercial
Water System Connection Additional Inspection - Each Inspection	50.00	
New Water Meter & Installation - 3/4" Meter	325.00	
New Water Meter Purchase	275.00	
All Others	Quote	
Water Meter Repair Due To Customer's Damage	325.00	
Water Meter Test, by written request of consumer	200.00	Payable up front
Water service turned on or off	50.00	
Water sprinkler tap - Annual Fee	200.00	
Final Bill Fee	35.00	
Bulk Water Sales	10 times the normal in district rate	Minimum fee $300.00
Out of District Application Fee - Residential/Commercial	1,000.00	
Water Bill Adjustment from Estimate to Actual	25.00 after 2nd adjustment	

CARMEL RECREATION AND PARKS DEPARTMENT

FEE DESCRIPTION	2014 ADOPTED USER FEES	2015 ADOPTED USER FEES	2016 PROPOSED USER FEE SCHEDULE	2016 PROPOSED USER FEE SCHEDULE
Camp:				
Playground Camp	$ 460.00	$ 460.00	$ 460.00	$920.00 non-res
* Early Bird Registration Fee - Playground Camp	$ 410.00	$ 410.00	$ 410.00	$820.00 non-res
Primary Camp (9:30 a.m. - 2:30 p.m.)	$ 510.00	$ 510.00	$ 510.00	$1,020.00 non-res
* Early Bird Registration Fee - Primary Camp	$ 460.00	$ 460.00	$ 460.00	$ 920.00 non-res
Primary Camp Extended Day (2:30-4:30 p.m.)	$ 190.00	$ 190.00	$ 190.00	
Classes / Lessons:				
Adult Classes	$65.00 - $320.00	$65.00 - $320.00	$65.00 - $320.00	plus $35.00 non-res.
CPR Review	$ 70.00	$ 70.00	$ 70.00	$105.00 non-res.
Lifeguard Training / First Aid	$375.00 / Non-Resident $500.00	$375.00 / Non-Resident $500.00	$ 375.00	$410.00 non-res.
Lifeguard Training Review	$190.00	$190.00	$ 190.00	$225.00 non-res.
Pre-School Classes	Free - $175.00	Free - $175.00	Free - $175.00	plus $35.00 non-res.
RTE - Responding to Emergencies	$220.00	$220.00	$ 220.00	$255.00 non-res.
Special Tennis, Aerobics, or Other Lessons	Cost	Cost	Cost	plus $35.00 non-res.
Swimming Lessons, including Permit	$140.00 residents only	$140.00 residents only	$140.00 residents only	
Additional Swimming Lessons	$ 70.00	$ 70.00	$70.00 residents only	
Tennis Lessons - Six One Hour Sessions	$120.00	$70.00 / $140.00 non-residents	$ 70.00	$105.00 non-res.
Tennis Lessons - Eight One Hour Sessions	$ -	$90.00 / $180.00 non-resident	$ 90.00	$125.00 non-res.
Facilities Rentals **(residents only)**:				
Ballfield Rental - 2 Hour Limit	$150.00 / $250.00 w/lights	$150.00 / $250.00 w/lights	$150.00 / $250.00 w/lights	
Boat Rental Fee	$4.00 - $7.00	$4.00 - $7.00	$4.00 - $7.00	
Civic Building Rental / Pavilion	$200.00 + Supervisor Hrly Rate	$200.00 + Supervisor Hrly Rate	$200.00 + Supervisor Hrly Rate	
Group Picnic	$150.00 residents only	$150.00 residents only	$150.00 residents only	
Private Building Rental	$300.00 + Supervisor Hrly Rate	$300.00 + Supervisor Hrly Rate	$300.00 + Supervisor Hrly Rate	
Sycamore Park Concession (seasonal)	$ 4,600.00	$ 4,600.00	$ 4,600.00	$ 3,500.00
ID Permits **(residents only)**:				
Beach Guest Cards (10 punches)	$ 50.00	$ 50.00	$ 50.00	
Adult Swim Permit	$ 100.00	$ 100.00	$ 100.00	
Daily Adult Beach Fee	$ 8.00	$ 8.00	$ 8.00	
Daily Adult Guest Beach Fee	$ 10.00	$ 10.00	$ 10.00	
Daily Youth Beach Fee	$ 7.00	$ 7.00	$ 7.00	
Daily Youth Guest Beach Fee	$ 9.00	$ 9.00	$ 9.00	
Family Swim Permit	$ 200.00	$ 200.00	$ 200.00	
Family Tennis Permit	$ 80.00	$ 80.00	$ 80.00	
Resident Identification Card	$ 6.00	$ 6.00	$ 6.00	
Senior Citizen Resident Identification Card	No Charge	No Charge	No Charge	
Nanny Identification Card	$ 10.00	$ 12.00	$ 12.00	
Nanny Swim Pemit	$ 100.00	$ 100.00	$ 100.00	
Individual Tennis Permit	$ 50.00	$ 50.00	$ 50.00	
Tennis Guest Fee	$ 6.00	$ 6.00	$ 6.00	
Youth Swimming Permit	$ 80.00	$ 80.00	$ 80.00	
Dog Park:				
Sycamore Dog Park User Fee - Resident	$25.00 Annual	$25.00 Annual	$25.00 Annual	
Sycamore Dog Park User Fee - Non-Resident	$75.00 Annual	$75.00 Annual	$75.00 Annual	

HAROLD GARY
Chairman

CRAIG PAEPRER
Vice-Chair

BOARD MEMBERS
CARL GREENWOOD
ANTHONY GIANNICO
DAVE FURFARO
CARL STONE
KIM KUGLER

TOWN OF CARMEL
PLANNING BOARD

60 McAlpin Avenue
Mahopac, New York 10541
Tel. (845) 628-1500 – Ext.190
www.ci.carmel.ny.us

MICHAEL CARNAZZA
Director of Code Enforcement

RICHARD FRANZETTI, P.E.
Town Engineer

PATRICK CLEARY,
AICP,CEP,PP,LEED AP
Town Planner

MEMORANDUM

To: Mary Ann Maxwell, Comptroller

From: Rose Trombetta

Date: December 2, 2015

SUBJECT: USER FEE SCHEDULE FOR FISCAL YEAR 2016

Chairman Robert Laga of the ECB and Chairman John Maxwell of the Zoning Board of Appeals recommend the User Fee Schedule for fiscal year 2016to remain the same as 2015.

#3

Pasquerello,Anne

From: Maxwell,Mary Ann
Sent: Wednesday, December 02, 2015 4:55 PM
To: Pasquerello,Anne
Subject: FW: 2nd Electric Bid

☑ Work Session 12/9/15

☐ Agenda

Anne,
Please add this to the work session next week....consider awarding of electric bid for 24 month period commencing November 16, 2016 – October 31, 2018.
Thanks,
Mary Ann

Mary Ann Maxwell
Town Comptroller
Town of Carmel
(845) 628-1500 ext 175
Fax (845) 628-7085
mam@ci.carmel.ny.us

From: Alessandro Mazzotta [mailto:Alessandro.Mazzotta@putnamcountyny.gov]
Sent: Friday, November 13, 2015 2:16 PM
To: Forwarder Tony Hay; Maxwell,Mary Ann; Peter Brewster Hansen (phansen@brewstervillage-ny.gov)
Cc: Christopher Schiller (cschiller@resolutionenergygroup.com); Cynthia Jaffre
Subject: 2nd Electric Bid

Hello,

The County opened the 2nd Electric Bid on November 5, 2015. We received one bid from Champion Energy. They offered the following fixed prices to commence on November 1, 2016:

12 month at $.07301
24 month at $.07294
36 month at $.07396

It is the County's intention to award the contract for a 24 month period commencing on November 1, 2016 and ending on October 31, 2018 at the fixed rate of $.07294 per kwh. As before, each municipality would execute separate contracts with Champion Energy with the assistance of Christopher Schiller of Resolution Energy Group.

Please contact me with any comments or questions.

Thanks.

Alex

#4

Short Environmental Assessment Form
Part 1 - Project Information

Instructions for Completing

Part 1 - Project Information. The applicant or project sponsor is responsible for the completion of Part 1. Responses become part of the application for approval or funding, are subject to public review, and may be subject to further verification. Complete Part 1 based on information currently available. If additional research or investigation would be needed to fully respond to any item, please answer as thoroughly as possible based on current information.

Complete all items in Part 1. You may also provide any additional information which you believe will be needed by or useful to the lead agency; attach additional pages as necessary to supplement any item.

Part 1 - Project and Sponsor Information Town of Carmel, New York		
Name of Action or Project: Long Pond Road Improvement District Roadway Reconstruction Project		
Project Location (describe, and attach a location map): See Figures 1 and 2 (attached) for project site location.		
Brief Description of Proposed Action: See attached project description.		
Name of Applicant or Sponsor: Town of Carmel, New York	Telephone: 845-628-1500 E-Mail: ks@ci.carmel.ny.us	
Address: 60 McAlpin Avenue		
City/PO: Mahopac	State: New York	Zip Code: 10541

	NO	YES
1. Does the proposed action only involve the legislative adoption of a plan, local law, ordinance, administrative rule, or regulation? If Yes, attach a narrative description of the intent of the proposed action and the environmental resources that may be affected in the municipality and proceed to Part 2. If no, continue to question 2.	☑	☐
2. Does the proposed action require a permit, approval or funding from any other governmental Agency? If Yes, list agency(s) name and permit or approval: - NYCDEP Land Occupancy Permit - Coverage under NYSDEC Stormwater General Permit GP-0-15-002	☐	☑

3.a. Total acreage of the site of the proposed action? 2.82 acres
b. Total acreage to be physically disturbed? 0.97 acres
c. Total acreage (project site and any contiguous properties) owned or controlled by the applicant or project sponsor? 2.74 acres

4. Check all land uses that occur on, adjoining and near the proposed action.
☐ Urban ☐ Rural (non-agriculture) ☐ Industrial ☐ Commercial ☑ Residential (suburban)
☑ Forest ☐ Agriculture ☐ Aquatic ☐ Other (specify): _____
☐ Parkland

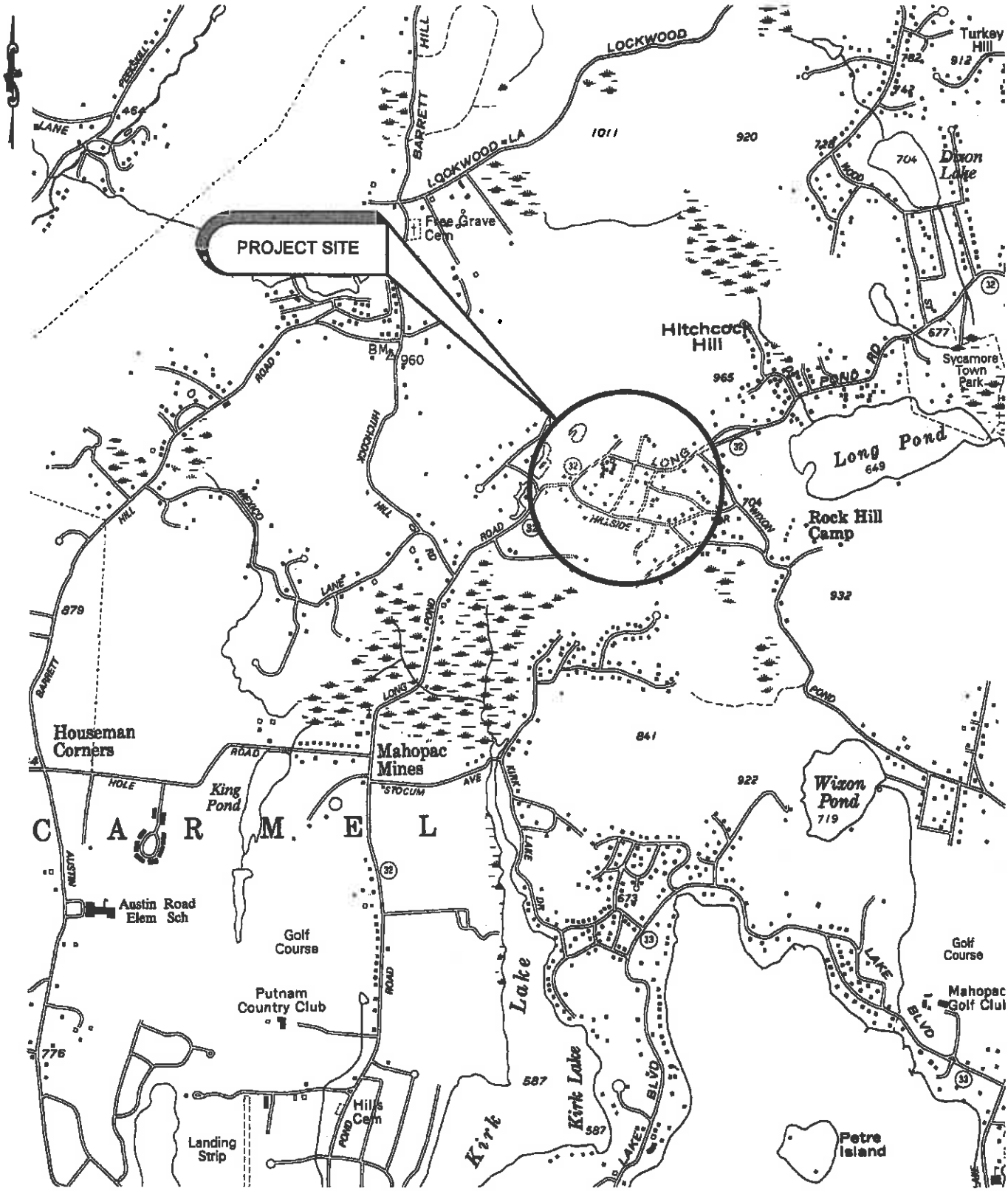

DATE: NOVEMBER 2015

J R F A — J. ROBERT FOLCHETTI & ASSOCIATES, P.E., L.S. CIVIL / ENVIRONMENTAL ENGINEERS www.jrfa.com 31 SODOM ROAD BREWSTER, NY 10509 845-363-1569	TOWN of CARMEL, NEW YORK ROADWAY RECONSTRUCTION PROJECT LONG POND ROAD IMPROVEMENT DISTRICT LOCATION MAP	FIGURE: 1 SCALE: 1" = 2,000' DWG. NO.

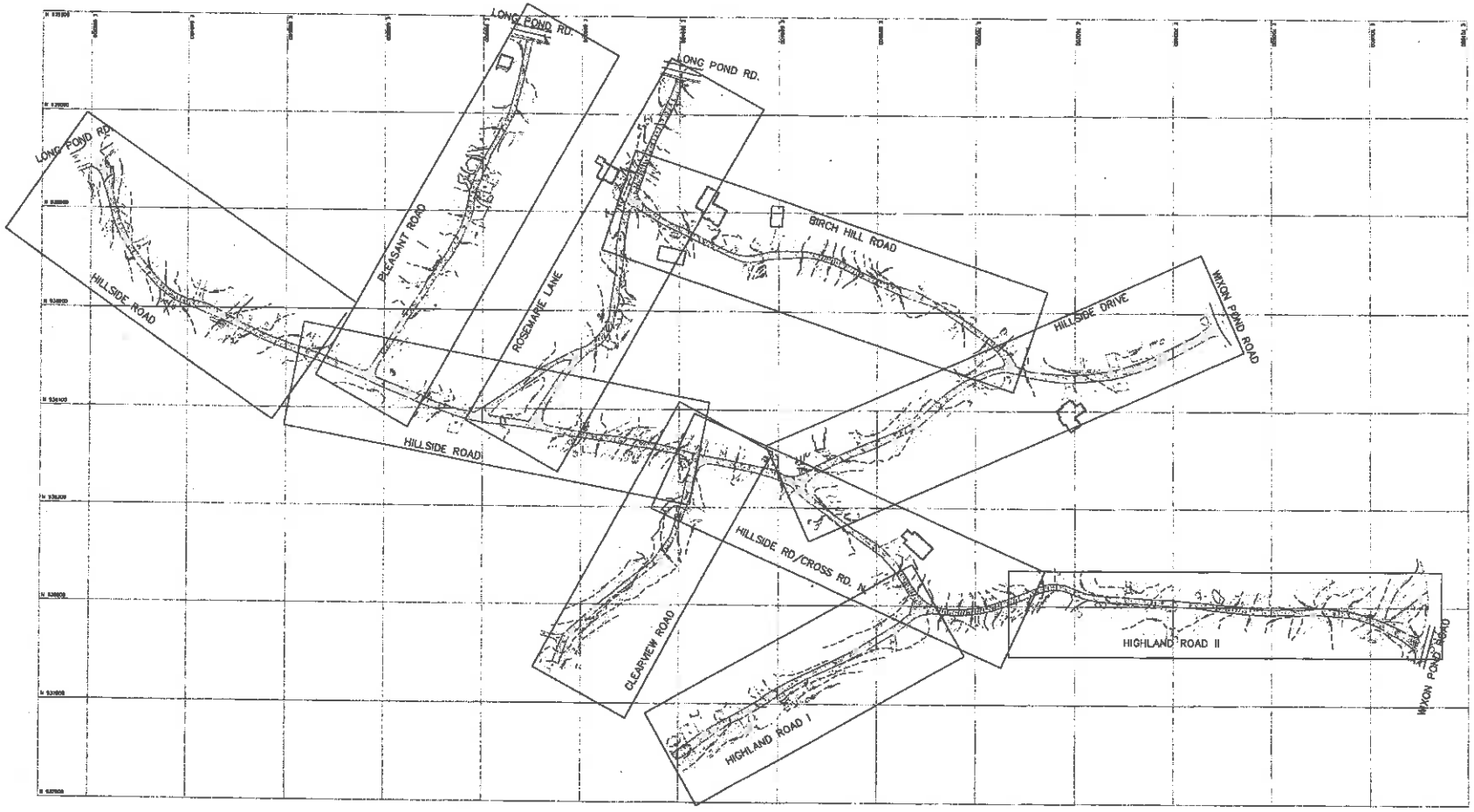

PLAN VIEW
SCALE: 1"= 100'

NOTE:
THIS SHEET IS INVALID AND INCOMPLETE UNLESS SIGNED AND SEALED BY THE ENGINEER AND ACCOMPANIED BY EACH OF THE OTHER SHEETS.

WARNING– IT IS A VIOLATION OF NEW YORK EDUCATION LAW, SECTION 7209.2, FOR ANY PERSON, UNLESS HE IS ACTING UNDER THE DIRECTION OF A LICENSED PROFESSIONAL ENGINEER OR LAND SURVEYOR, TO ALTER THIS DOCUMENT IN ANY WAY. IF ALTERED, THE ALTERING PERSON SHALL COMPLY WITH THE REQUIREMENTS OF NEW YORK EDUCATION LAW, SECTION 7209.2

REVISIONS			
NO.	BY	DATE	REMARKS

DES. _____
DWG. _____
CHK. _____

J R F A

J. ROBERT FOLCHETTI & ASSOCIATES, L.L.C.
CIVIL / ENVIRONMENTAL ENGINEERS
www.jrfa.net
31 SODON ROAD
BEDFORD, NY 10506
845-363-1200

TOWN OF CARMEL
PUTNAM COUNTY, NEW YORK

ROADWAY RECONSTRUCTION PROJECT
LONG POND ROAD IMPROVEMENT DISTRICT

ROADWAY KEY MAP

SCALE: 1" = 100'-0"

JRFA
DATE OCTOBER 2015
G SHEET ____ OF ____
DWG. NO. FIGURE-2

1.0 BACKGROUND AND SUMMARY

The Town of Carmel is proposing to undertake a roadway reconstruction project within the limits of a recently formed town district known formerly as the *Long Pond Road/Highway Improvement District.* The purpose of the project is to protect and enhance the public health and welfare of residents of the Town of Carmel through the provision of traveled ways that are safer for use and passage, and that more closely conform to Town highway design standards. To achieve stated safety improvements, eight (8) existing roadways within the Long Pond Road Improvement District will be reconstructed, these include: Hillside Road, Cross Road North, Highland Road, Pleasant Road, Rosemarie Lane, Birch Hill Road, Hillside Drive and Clearview Road. The general location of respective roadways is included on Figure-1, attached.

Proposed roadway reconstruction activities will include minor modifications to the horizontal and vertical alignments of various sections of roadway and roadway widening at certain locations to improve site distances. All roads will be re-surfaced with asphaltic cement concrete (i.e., asphalt) as part of the project. At present, several of the identified roads including: Hillside Road, Cross Road North, Hillside Drive and Clearview Road are surfaced with asphalt the balance of roads including: Pleasant Road, Rosemarie Lane, and Birch Hill Road are gravel (NYSDOT Item-4) surfaced. Highland Road is asphalt surfaced to the north of Cross Road North and gravel surfaced to the south. No curbing is installed on any segment of existing roadway.

Stormwater runoff from roadways and adjacent tributary areas is conveyed in existing roadside ditches and drainage swales that direct runoff to wetland areas and surface waterbodies to the south and east. Since more conventional conveyance system components are not currently installed in the identified roads, the existing roadside ditches and drainage swales shall remain. Hillside Road contains several culvert pipes that are in a deteriorated condition, as such, these have been scheduled for replacement under this project.

Roadway re-alignment and widening activities will be completed along various sections of the following: Hillside Road, Cross Road North, Highland Road-II, Pleasant Road, Rosemarie Lane and Birch Hill Road. Nominal widening activities will be completed on Hillside Drive, with asphalt pavement re-surfacing only scheduled for Clearview Road and Highland Road. The combination of Hillside Road, Cross Road North and Highland Road-II represent one continuous thoroughfare that extends in an east to west direction from Wixon Pond Road to Long Pond Road. Under this project the respective roadways will be treated as a single thoroughfare. The total length of road scheduled for reconstruction is ±7,510 linear feet. Existing roadways widths vary from ±10 to ±18 feet. Widening activities will be completed on Hillside Road, Cross Road North and Highland Road-II to provide a minimum traveled-way width of 16 feet. Pleasant Road, Rosemarie Lane, Birch Hill Road and Hillside Drive will be widened to provide a minimum traveled-way width of 14 feet. Clearview Road and Highland Road-I will remain at their current respective traveled-way widths. The easterly end of Highland Road-II will be re-aligned to improve site distance at the Wixon Pond Road intersection. Re-alignment activities will extend the roadway on to lands owned by the NYC Department of Environmental Protection (NYCDEP). A land occupancy permit issued by NYCDEP to the Town will be required to execute respective modification to roadway alignment. Roadways included under this project are illustrated on Figure-2, attached.

Rosemarie Lane is divided into two branched segments at the southerly end. As part of the project the westerly branch of Rosemarie Lane will be closed to traffic and abandoned in place. Additionally, approximately 190 linear feet of Pleasant Road is located within 50 feet of an existing watercourse. Pleasant Road is currently a gravel road that will be re-surfaced with asphalt as part of the project. To

eliminate the introduction of a new impervious surface within 50 foot limiting distance to existing watercourse, respective section of Pleasant Road shall be re-surfaced with a pervious, pre-cast concrete modular paving system. Proposed roadway reconstruction activity statistics are summarized in Table-1, below.

Table-1
Proposed Roadway Reconstruction Summary

Roadway Name	Roadway Length	Existing Traveled Way Area	Proposed Traveled Way Area	Change in Area	Change in Area
	(linear feet)	(square feet)	(square feet)	(square feet)	(square feet)
Hillside Rd., Cross Rd. N. & Highland Road-II	3,037	41,324	55,057	13,733	33.23%
Pleasant Road *	771	8,971	11,555	2,584	28.80%
Rosemarie Lane	776	14,169	12,394	-1,775	-12.53%
Birch Hill Road	865	10,469	13,642	3,173	30.31%
Hillside Drive	942	14,500	15,087	587	4.05%
Clearview Road	525	6,475	6,475	0	0.00%
Highland Road-I	592	8,689	8,689	0	0.00%
Total	**7,508**	104,597	122,899 *	18,302 *	17.50% *

* Proposed Traveled Way Area includes ±2,910 square feet of pervious, concrete paving units on Pleasant Road.

As demonstrated in Table-1 above, the total project traveled way area will increase from ±104,597 square feet to 122,899 square feet. Both existing and proposed traveled way areas represent impervious surface area. A portion of Pleasant Road will be re-surfaced with pervious, modular pre-cast concrete paving units to eliminate the introduction of a new impervious surface area within 50 foot limiting distance to an existing watercourse. Thus, the total impervious traveled way area will increase by approximately 15,392 square feet or 14.7%.

The aggregate watershed area, tributary to those portions of traveled way that will be expanded, measures approximately 37.26 acres (±1,623,046 sf). The proposed 15,392 square feet of expanded traveled way area represents a 0.95% increase in watershed imperviousness. With an increase of less than 1% in impervious area, the roadway reconstruction project will have a negligible impact on watershed hydrology, with no measurable change in runoff rate.

Table-2 Proposed Land Disturbance Area Summary			
Roadway Name	**Area to be Disturbed for Roadway Widening/Horizontal Alignment Modifications**	**Vegetated Areas to be Disturbed for Re-alignment Grading Activities**	**Total Disturbance**
	(square feet)	(square feet)	(square feet)
Hillside Rd., Cross Rd. N. & Highland Road-II	13,613.39	11,921.34	25,534.73
Pleasant Road *	2,426.58	2,341.01	4,767.59
Rosemarie Lane	1,224.47	2,778.24	4,002.71
Birch Hill Road	3,035.71	2,813.79	5,849.50
Hillside Drive	436.40	754.48	1,190.88
Clearview Road	0.00	82.24	82.24
Highland Road-I	0.00	886.92	886.92
Total	**20,836.65**	**21,578.02**	**42,414.57**

The majority of work includes asphalt re-surfacing of existing roadways with none or limited disturbance to the existing soil sub-grade. Areas of existing roadway limited to asphalt pavement re-surfacing and/or nominal changes to vertical alignment are not included in the disturbance area calculations in Table-2 above. Temporary Erosion & Sediment Control (E&SC) practices, including silt fencing and hay bale dikes, will be installed in appropriate locations prior to the start of any land disturbance activities. Erosion & Sediment Control Plan drawing sheets have been developed as part of the project engineering plans. Coverage under SPDES General Permit GP-0-15-002 will be obtained by the Town prior to the start of any land disturbance activities. To avoid conflict with the endangered "Indiana Bat" all tree clearing activities will be completed during the period of October 1st and March 31st. Disturbance to existing local wetland areas will be limited to culvert replacement and limited earth filling activities. The total disturbance to local wetland areas measures approximately ±320 square feet (0.0073 acres). All disturbance activities will occur immediately adjacent to existing roadways where maintenance of existing roadways swales is performed periodically. As such, no adverse impacts to the endangered "Bog Turtle" are anticipated. A period of 3 to 4 consecutive months is expected for completion of the proposed roadway reconstruction project.

(** END OF SECTION **)

	NO	YES	N/A
5. Is the proposed action,			
a. A permitted use under the zoning regulations?	☐	☑	☐
b. Consistent with the adopted comprehensive plan?	☐	☑	☐
6. Is the proposed action consistent with the predominant character of the existing built or natural landscape?	NO ☐	YES ☑	
7. Is the site of the proposed action located in, or does it adjoin, a state listed Critical Environmental Area? If Yes, identify:	NO ☑	YES ☐	
8. a. Will the proposed action result in a substantial increase in traffic above present levels?	NO ☑	YES ☐	
b. Are public transportation service(s) available at or near the site of the proposed action?	☑	☐	
c. Are any pedestrian accommodations or bicycle routes available on or near site of the proposed action?	☑	☐	
9. Does the proposed action meet or exceed the state energy code requirements? If the proposed action will exceed requirements, describe design features and technologies:	NO ☑	YES ☐	
10. Will the proposed action connect to an existing public/private water supply? If No, describe method for providing potable water:	NO ☑	YES ☐	
11. Will the proposed action connect to existing wastewater utilities? If No, describe method for providing wastewater treatment:	NO ☑	YES ☐	
12. a. Does the site contain a structure that is listed on either the State or National Register of Historic Places?	NO ☑	YES ☐	
b. Is the proposed action located in an archeological sensitive area?	☑	☐	
13. a. Does any portion of the site of the proposed action, or lands adjoining the proposed action, contain wetlands or other waterbodies regulated by a federal, state or local agency?	NO ☐	YES ☑	
b. Would the proposed action physically alter, or encroach into, any existing wetland or waterbody? If Yes, identify the wetland or waterbody and extent of alterations in square feet or acres: Local Wetlands +/- 320 square feet	☐	☑	
14. Identify the typical habitat types that occur on, or are likely to be found on the project site. Check all that apply: ☐ Shoreline ☑ Forest ☐ Agricultural/grasslands ☐ Early mid-successional ☐ Wetland ☐ Urban ☑ Suburban			
15. Does the site of the proposed action contain any species of animal, or associated habitats, listed by the State or Federal government as threatened or endangered?	NO ☐	YES ☑	
16. Is the project site located in the 100 year flood plain?	NO ☑	YES ☐	
17. Will the proposed action create storm water discharge, either from point or non-point sources? If Yes, a. Will storm water discharges flow to adjacent properties? ☐ NO ☐ YES	NO ☑	YES ☐	
b. Will storm water discharges be directed to established conveyance systems (runoff and storm drains)? If Yes, briefly describe: ☐ NO ☑ YES Existing roadside swales and culvert piping will continue to convey stormwater runoff upon completion of roadway reconstruction activities.			

	NO	YES
18. Does the proposed action include construction or other activities that result in the impoundment of water or other liquids (e.g. retention pond, waste lagoon, dam)? If Yes, explain purpose and size:	☑	☐
19. Has the site of the proposed action or an adjoining property been the location of an active or closed solid waste management facility? If Yes, describe:	☑	☐
20. Has the site of the proposed action or an adjoining property been the subject of remediation (ongoing or completed) for hazardous waste? If Yes, describe:	☑	☐

I AFFIRM THAT THE INFORMATION PROVIDED ABOVE IS TRUE AND ACCURATE TO THE BEST OF MY KNOWLEDGE

Applicant/sponsor name: Kenneth Schmitt, Supervisor Date:

Signature:

PRINT FORM

Agency Use Only [If applicable]	
Project:	
Date:	

Short Environmental Assessment Form
Part 2 - Impact Assessment

Part 2 is to be completed by the Lead Agency.
Answer all of the following questions in Part 2 using the information contained in Part 1 and other materials submitted by the project sponsor or otherwise available to the reviewer. When answering the questions the reviewer should be guided by the concept "Have my responses been reasonable considering the scale and context of the proposed action?"

	No, or small impact may occur	Moderate to large impact may occur
1. Will the proposed action create a material conflict with an adopted land use plan or zoning regulations?	☑	☐
2. Will the proposed action result in a change in the use or intensity of use of land?	☑	☐
3. Will the proposed action impair the character or quality of the existing community?	☑	☐
4. Will the proposed action have an impact on the environmental characteristics that caused the establishment of a Critical Environmental Area (CEA)?	☑	☐
5. Will the proposed action result in an adverse change in the existing level of traffic or affect existing infrastructure for mass transit, biking or walkway?	☑	☐
6. Will the proposed action cause an increase in the use of energy and it fails to incorporate reasonably available energy conservation or renewable energy opportunities?	☑	☐
7. Will the proposed action impact existing: a. public / private water supplies?	☑	☐
b. public / private wastewater treatment utilities?	☑	☐
8. Will the proposed action impair the character or quality of important historic, archaeological, architectural or aesthetic resources?	☑	☐
9. Will the proposed action result in an adverse change to natural resources (e.g., wetlands, waterbodies, groundwater, air quality, flora and fauna)?	☑	☐
10. Will the proposed action result in an increase in the potential for erosion, flooding or drainage problems?	☑	☐
11. Will the proposed action create a hazard to environmental resources or human health?	☑	☐

PRINT FORM

Agency Use Only [If applicable]

Project:

Date:

Short Environmental Assessment Form
Part 3 Determination of Significance

For every question in Part 2 that was answered "moderate to large impact may occur", or if there is a need to explain why a particular element of the proposed action may or will not result in a significant adverse environmental impact, please complete Part 3. Part 3 should, in sufficient detail, identify the impact, including any measures or design elements that have been included by the project sponsor to avoid or reduce impacts. Part 3 should also explain how the lead agency determined that the impact may or will not be significant. Each potential impact should be assessed considering its setting, probability of occurring, duration, irreversibility, geographic scope and magnitude. Also consider the potential for short-term, long-term and cumulative impacts.

☐ Check this box if you have determined, based on the information and analysis above, and any supporting documentation, that the proposed action may result in one or more potentially large or significant adverse impacts and an environmental impact statement is required.

☑ Check this box if you have determined, based on the information and analysis above, and any supporting documentation, that the proposed action will not result in any significant adverse environmental impacts.

Town of Carmel, New York	
Name of Lead Agency	Date
Kenneth Schmitt	Supervisor
Print or Type Name of Responsible Officer in Lead Agency	Title of Responsible Officer
Signature of Responsible Officer in Lead Agency	Signature of Preparer (if different from Responsible Officer)

PRINT FORM

#5

Joseph J. Spofford, Jr.
Town Justice

JUSTICE COURT
Town Of Carmel
Town Hall
60 McAlpin Avenue
Mahopac, New York 10541
Tel. 845-628-1500 Fax: 845-628-4550

Thomas J. Jacobellis
Town Justice

☑ Work Session 12/9/15

☐ Agenda

To: Supervisor Schmitt
Carmel Town Board

From: Hon. Joseph J. Spofford
Hon. Thomas J. Jacobellis

Re: Position of Account Clerk

Date: December 2, 2015

Judge Jacobellis and I would like to inform you that as of December 31, 2015 Ann Petricig will be retiring from the Justice Court in her position as Account Clerk. Ann has been with the Town 15 years and has been a great asset to our team.

We would also like to inform you that we have offered the Account Clerk position to Francine Schmansky, who is currently in the Tax Receiver's office as an Account Clerk. Fran has accepted this position knowing that it will be a lateral move at the Group 2, Step 4 salary level which is $43,773.51.

Thank you.

November 23, 2015

Honorable Joseph Spofford
Honorable Thomas Jacobellis
Carmel Justice Court

Dear Judge Spofford and Judge Jacobellis,

This letter is to notify you that I am retiring from the Town of Carmel as Account Clerk in the Justice Court. December 30, 2015 will be my last day of employment.

I have enjoyed working with my coworkers and am ready to move on to the next phase in my life.

Thank you both for making my years here such a pleasure.

Sincerely,

Ann Petring

Joseph J. Spofford, Jr.
Town Justice

JUSTICE COURT
Town Of Carmel
Town Hall
60 McAlpin Avenue
Mahopac, New York 10541
Tel. 845-628-1500 Fax: 845-628-4550

Thomas J. Jacobellis
Town Justice

To: Fran Schmansky

From: Honorable Joseph J. Spofford and Honorable Thomas J. Jacobellis

Date: December 1, 2015

Re: Account Clerk Position

Tom and I would like to offer you the Account Clerk position in the Justice Court effective January 1, 2016 at a Group 2, Step 4 salary level which is $43,773.51.

Please advise us of your decision.

I Accept 12/1/15
Francine Schmansky

TOWN OF CARMEL HIGHWAY DEPARTMENT

Carmel Highway Department
55 McAlpin Avenue
Mahopac, NY 10541

MICHAEL SIMONE
Superintendent of Highways

845.628.7474
FAX 845.628.1471
MSimone@bestweb.net

#6

MEMORANDUM

☑ Work Session 12/9/15

☐ Agenda

TO: Town Board

FROM: Michael Simone – Highway Superintendent MS

DATE: December 2, 2015

RE: Highway Requests – Fall Bid Awards

I am recommending the following bids be awarded as follows:

SAND

Red Wing Properties	F.O.B.	-	$15.50 per ton
	DELIVERED	-	$20.50 per ton

WINTER MIX

Package Pavement Co., Inc.		-	$104.00 per ton
	56 – 60# BAGS	-	$302.40 per pallet
	MILEAGE ADJ	-	$ 3.70 per ton

GUIDERAIL—Complete Layout & Installation per NYS DOT specifications

CHEMUNG SUPPLY CORP. (Single Bidder)

Galvanized:	Corrugated beam rail, 12' 6" post spacing	-	$ 22.94, per linear foot
	Corrugated beam rail, 12' 3" post spacing	-	$ 26.14, per linear foot
	6" x 6" box beam rail,		
	Spliced plates/hardware inclusive	-	$ 46.74, per linear foot
	Using type one end sections	-	$ 744.00, each installed
	Using type two end sections	-	$1,394.00, each installed
	6" x 6" box beam rail		
	Shop Cut & Mitered Curve	-	$74.20, per linear foot
Corten:	Corrugated beam rail, 12' 6" post spacing	-	$ 23.84, per linear foot
	Corrugated beam rail, 12' 3" post spacing	-	$ 26.44, per linear foot
	6" x 6" box beam rail,		
	Spliced plates/hardware inclusive	-	No Bid
	Using type one end sections	-	No Bid
	Using type two end sections	-	No Bid
	6" x 6" box beam rail		
	Shop Cut & Mitered Curve	-	No Bid
Timber:	Ironwood 1'- 100 L.F.	-	$ 108.40, per linear foot
	100' and over	-	$ 94.60, per linear foot
	End terminal, type I timber rail complete	-	$1,594.00, each
	End terminal, type II timber rail complete	-	$2,464.00, each
	Anchorage unit guide rail, back slope	-	$2,464.00, each

MS/Sen

cc Ann Garris – Town Clerk
Gregory Folchetti – Town Attorney
Comptroller's Office

Ann Spofford
Town Clerk
Town of Carmel

Town Hall
60 McAlpin Avenue
Mahopac, New York 10541

Telephone: 845.628.1500
Fax: 845.628.7434

MEMORANDUM

To: Michael Simone, Highway Superintendent

From: Ann Spofford, Town Clerk

Date: November 5, 2015

Re: Bid Opening for Sand, Guide Rail and Winter Mix

The above referenced bid opening was held today.

I have attached herewith, a copy of the bid opening results and copies of all bids received. Original bids are on file in the office of the Town Clerk.

cc: G. Folchetti, Town Counsel

BID OPENING RESULTS
SAND, GUIDE RAIL AND WINTER MIX
NOVEMBER 5, 2015

A bid opening was held in Meeting Room 1 at Town Hall, 60 McAlpin Avenue, Mahopac, New York, on the 5th day of November 2015, at 11:00 a.m. by Ann Spofford, Town Clerk and witnessed by Phyllis Bourges, Deputy Town Clerk. With the bidders present in agreement, reading of the following legal notice was waived:

ADVERTISEMENT FOR BID

NOTICE IS HEREBY GIVEN that sealed bids will be received at the office of the Town Clerk of the Town of Carmel, Town Hall, 60 McAlpin Avenue, Mahopac, New York, 10541, until 11:00 a.m. on Thursday, the 5th day of November, 2015 at which time all bids will be opened and publicly read and recorded by the Town Clerk not less than five (5) days subsequent to publication of this notice in the official newspapers of the Town of Carmel for the following:

SAND
GUIDE RAIL
WINTER MIX

All bidders shall comply with Section 103-A and 103-D of the General Municipal Law relating to non-collusive bidding and waiver of immunity against criminal prosecution.

Specifications may be obtained at the office of the Town Clerk at the above address, between the hours of 8:30 a.m. and 4:30 p.m. Monday through Friday.

Bid envelopes shall be marked "BID" plus item bid. All bids must be submitted on bid form furnished by the Town of Carmel.

The Town Board of the Town of Carmel reserves the right to reject any and all bids and abandon the proposal or may reject all bids and re-advertise for new bids at a future date.

By Order of the Town Board of the Town of Carmel
Ann Spofford, Town Clerk

All bids received were opened, publicly read and recorded as follows:

Category: Washed Sand

	Bidder Name & Address	FOB Plant / ton	Delivered / ton
1.	Nicholas F. Domain Sand & Gravel 2441 Route 22 Dover Plains, NY 12522	$12.00	$18.00
2.	Red Wing Properties, Inc P.O. Box 408 Stormville, NY 12582	$15.50	$20.50
3.	Thalle Industries, Inc. 172 Route 9 Fishkill, NY 12524	$13.00	$18.00

All bids were accompanied with signed non-collusive bidding certifications. Specifications were sent to eight (8) potential bidders.

Category: Guide Rail

	Bidder Name & Address	Total Bid Price
1.	Chemung Supply Corp P.O. Box 527 Elmira, NY 14902	See attached bid.

The bid was accompanied with a signed non-collusive bidding certification and bid bond. A certificate of insurance was **NOT** included. Specifications were sent to four (4) potential bidders.

Category: Winter Mix

	Bidder Name & Address	Per Ton	Per Pallet	Mileage Adj.
1.	Package Pavement Company, Inc. P.O. Box 408 Stormville, NY 12582	$104.00	$302.40	$3.70 / ton

The bid was accompanied with a signed non-collusive bidding certification. Specifications were sent to five (5) potential bidders.

Respectfully submitted,

Ann Spofford

Ann Spofford, Town Clerk

TOWN OF CARMEL
HIGHWAY DEPARTMENT

1

DETAILED SPECIFICATIONS FOR WASHED SAND

1. These specifications cover sand for use in conducting work of the Carmel Highway Department.

2. The sand shall be processed in a unit that combines the functions of washing, classifying, and dehydrating. The unit shall have provisions for injecting rising currents of water that flows up through the aggregates and carries foreign particles of light weight or deleterious materials out and over a weir to waste. The material shall be dehydrated to proper condition prior to stockpiling to eliminate flushing and segregating. The resulting sand product shall be of the "Concrete Type" and suitable for use as an abrasive in winter sanding operations.

3. The following is a sample gradation of the requirement for sand:

	% -- Passing Approximately
# 4	95
# 8	75
# 16	50
# 30	30
# 50	10
#100	3

4. A bid price shall be indicated for sand to be furnished and loaded F.O.B. plant during this Department's normal working hours, that is from 7:00 A.M. to 3:30 P.M., Monday through Friday.

5. An alternate bid price shall be indicated for sand furnished and delivered to the Town of Carmel Highway Garage, 55 McAlpin Avenue, Mahopac, New York.

6. The sand shall be delivered in such quantities and at such times as may be designated by the Carmel Highway Superintendent or his authorized representative and shall be delivered within twenty-four hours of such designation.

Bidders shall OWN plants or sources of supply to insure a continuing supply of materials throughout the contract period. A copy of NY State Department of Transportation Certificate shall accompany bid.

WASHED SAND: Per Ton

F.O.B. Plant - $ 12.00

Delivered - $ 18.00

To determine the lowest bidder on F.O.B. bids, the Town of Carmel shall adjust each F.O. B. bid by adding to the bid price an amount equal to the sum obtained by multiplying $.25 x the distance in miles between the Town of Carmel Highway Garage at 55 McAlpin Avenue, Mahopac, New York, the bidder's F. O. B. point of delivery.

Date: 10/29/2015

BIDDER: Nicholas F. Domain Sand & Gravel

By: Raymond Domain

Title: OWNER

Address: 2441 RT 22

Dover Plains, NY 12522

Telephone: 845-832-9605

CELL 845-222-0809

CELL 845-629-2304

TOWN OF CARMEL

Non-Collusive Bidding Certification

By submission of this bid or proposal, the undersigned bidder(s) (certified) (certify) that to the best of (his) (their) knowledge and belief:

(a) The prices in this bid have been arrived at independently without collusion, consultation, communication, or agreement, as to any matter relating to such prices with any other bidder or with any competitor.

(b) The prices which have been quoted in this bid have not been knowingly disclosed by the bidder and will not knowingly be disclosed by the bidder prior to opening, directly or indirectly, to any other bidder or to any competitor; and

(c) No attempt has been made or will be made by the bidder to induce any other person, partnership or corporation to submit or not to submit a bid.

IN WITNESS WHEREOF, (we) (I) have executed this certificate and affirm the truth of the statements therein set forth under penalty of perjury the OCT 29 day of 20 15.

Raymond Demers
(Signature of Individual Signing Bid)

Nicholas F. Domain Sand & Gravel

By Raymond Demers

Corporate Seal

CERTIFIED MAIL

NICHOLAS F. DOMAIN
SAND & GRAVEL
2441 ROUTE 22
DOVER PLAINS, NY 12522

7013 3020 0001 3660 1353

UNITED STATES POSTAL SERVICE

1000

10541

U.S. POSTAGE
PAID
WINGDALE, NY
12594
OCT 30, '15
AMOUNT
$6.74
00091191-02

1

RECEIVED
NOV 02 2015
TOWN OF CARMEL
TOWN CLERK
Ann Spofford

Town of Carmel
Town Clerk
Town Hall, 60 McAlpin Ave
Mahopac, NY 10541

RETURN RECEIPT REQUESTED

BID: SAND

10541236093

2

TOWN OF CARMEL
HIGHWAY DEPARTMENT

DETAILED SPECIFICATIONS FOR WASHED SAND

1. These specifications cover sand for use in conducting work of the Carmel Highway Department.

2. The sand shall be processed in a unit that combines the functions of washing, classifying, and dehydrating. The unit shall have provisions for injecting rising currents of water that flows up through the aggregates and carries foreign particles of light weight or deleterious materials out and over a weir to waste. The material shall be dehydrated to proper condition prior to stockpiling to eliminate flushing and segregating. The resulting sand product shall be of the "Concrete Type" and suitable for use as an abrasive in winter sanding operations.

3. The following is a sample gradation of the requirement for sand:

	% -- Passing Approximately
# 4	95
# 8	75
# 16	50
# 30	30
# 50	10
#100	3

4. A bid price shall be indicated for sand to be furnished and loaded F.O.B. plant during this Department's normal working hours, that is from 7:00 A.M. to 3:30 P.M., Monday through Friday.

5. An alternate bid price shall be indicated for sand furnished and delivered to the Town of Carmel Highway Garage, 55 McAlpin Avenue, Mahopac, New York.

6. The sand shall be delivered in such quantities and at such times as may be designated by the Carmel Highway Superintendent or his authorized representative and shall be delivered within twenty-four hours of such designation.

Bidders shall OWN plants or sources of supply to insure a continuing supply of materials throughout the contract period. A copy of NY State Department of Transportation Certificate shall accompany bid.

WASHED SAND: Per Ton

F.O.B. Plant - $ 15.50

Delivered - $ 20.50

To determine the lowest bidder on F.O.B. bids, the Town of Carmel shall adjust each F.O. B. bid by adding to the bid price an amount equal to the sum obtained by multiplying $.25 x the distance in miles between the Town of Carmel Highway Garage at 55 McAlpin Avenue, Mahopac, New York, the bidder's F. O. B. point of delivery.

Date: 10/27/15

BIDDER: Red Wing Properties inc

By: [signature]

Title: President

Address: PO Box 408

Stormville NY. 12582

Telephone: 845-221-2224

BID MUST BE SUBMITTED ON THIS FORM

TOWN OF CARMEL

Non-Collusive Bidding Certification

By submission of this bid or proposal, the undersigned bidder(s) (certified) (certify) that to the best of (his) (their) knowledge and belief:

(a) The prices in this bid have been arrived at independently without collusion, consultation, communication, or agreement, as to any matter relating to such prices with any other bidder or with any competitor.

(b) The prices which have been quoted in this bid have not been knowingly disclosed by the bidder and will not knowingly be disclosed by the bidder prior to opening, directly or indirectly, to any other bidder or to any competitor; and

(c) No attempt has been made or will be made by the bidder to induce any other person, partnership or corporation to submit or not to submit a bid.

IN WITNESS WHEREOF, (we) (I) have executed this certificate and affirm the truth of the statements therein set forth under penalty of perjury the 27th day of 20 15 october.

(Signature of Individual Signing Bid)

Frank J Doherty JR - President

By

Corporate Seal

CERTIFIED MAIL

Red Wing
PROPERTIES INC

P.O. BOX 408
STORMVILLE, NY 12582

7010 3090 0000 2498 9527

UNITED STATES POSTAGE
PITNEY BOWES
02 1P $ 006.735
0000859581 OCT 27 2015
MAILED FROM ZIP CODE 12582

RECEIVED
TOWN OF CARMEL
OCT 29 2015
TOWN CLERK
Ann Sappard

Town of Carmel
Town clerk
60 McAlpin Ave
Mahopac NY. 10541

*Bid - Sand

10541$2340

TOWN OF CARMEL
HIGHWAY DEPARTMENT

3

DETAILED SPECIFICATIONS FOR WASHED SAND

1. These specifications cover sand for use in conducting work of the Carmel Highway Department.

2. The sand shall be processed in a unit that combines the functions of washing, classifying, and dehydrating. The unit shall have provisions for injecting rising currents of water that flows up through the aggregates and carries foreign particles of light weight or deleterious materials out and over a weir to waste. The material shall be dehydrated to proper condition prior to stockpiling to eliminate flushing and segregating. The resulting sand product shall be of the "Concrete Type" and suitable for use as an abrasive in winter sanding operations.

3. The following is a sample gradation of the requirement for sand:

	% -- Passing Approximately
# 4	95
# 8	75
# 16	50
# 30	30
# 50	10
#100	3

4. A bid price shall be indicated for sand to be furnished and loaded F.O.B. plant during this Department's normal working hours, that is from 7:00 A.M. to 3:30 P.M., Monday through Friday.

5. An alternate bid price shall be indicated for sand furnished and delivered to the Town of Carmel Highway Garage, 55 McAlpin Avenue, Mahopac, New York.

6. The sand shall be delivered in such quantities and at such times as may be designated by the Carmel Highway Superintendent or his authorized representative and shall be delivered within twenty-four hours of such designation.

Bidders shall OWN plants or sources of supply to insure a continuing supply of materials throughout the contract period. A copy of NY State Department of Transportation Certificate shall accompany bid.

WASHED SAND: Per Ton

F.O.B. Plant - $ $13.00 Thirteen Dollars

Delivered - $ $18.00 Eighteen Dollars

To determine the lowest bidder on F.O.B. bids, the Town of Carmel shall adjust each F.O. B. bid by adding to the bid price an amount equal to the sum obtained by multiplying $.25 x the distance in miles between the Town of Carmel Highway Garage at 55 McAlpin Avenue, Mahopac, New York, the bidder's F. O. B. point of delivery.

Date: November 5, 2015

BIDDER: Thalle Industries, Inc.

By: John J. Amato JOHN J. AMATO

Title: Sales Manager

Address: 172 Route 9
Fishkill, NY 12524

Telephone: 845-896-5156 X 106
Cell 914-490-7328

BID MUST BE SUBMITTED ON THIS FORM

NEW YORK STATE OF OPPORTUNITY. | **Department of Transportation**

ANDREW M. CUOMO
Governor

JOAN McDONALD
Commissioner

April 09, 2015

Geological Source Report Status: **Accepted (see note 1)**
Location: Thalle Industries, Inc.
Source No. 8- 54R,RFM
Fishkill, NY

This letter does not indicate the approval status of the source or the acceptability of the material derived therefrom.

Mr. Eric Billings
Thalle Industries, Inc.
172 Route 9
Fishkill, NY 12524

Dear Mr. Billings:

The 2015 Geologic Source Report Cyclic and Annual Modules submitted for the proposed operating location noted above have been reviewed and accepted. The Geological Source Report Requirements for the 2015 season have been satisfied. However, if significant discrepancies between the report and the quarry operations are noted during field inspection, a revised report will be required. Please note there shall be no extension or alteration to the limits of the area of proposed operations without prior approval from this office.

Aggregate sources which satisfy all applicable requirements of Materials Method 29, issued July 2007 will appear on the Approved List of Sources of Fine and Coarse Aggregates. The Approved List is available on the Internet @

https://www.dot.ny.gov/divisions/engineering/technical-services/materials-bureau/fine-coarse-aggregates

If the producer or the consulting geologist have any questions regarding these matters, they may call Ms. Marilyn Bradley, or members of the staff in the Materials Bureau, Engineering Geology Section at (518) 457-1038.

Very truly yours,

Marilyn Bradley

Marilyn Bradley
Engineering Geology

MJB/KDR
File: 8- 54R,RFM
cc: Scott Kehoe, Region 8 Materials Engineer
Dean H. Herrick Consulting Geologists

05/06/2015 7:04 AM FAX 8458965174 THALLE INDUSTRIES INC 0001/0002

NEW YORK STATE OF OPPORTUNITY. | **Department of Transportation**

ANDREW M. CUOMO
Governor

JOAN McDONALD
Commissioner

ATTACHMENT TO
8- 54R.RFM - April 09, 2015

Source 8-54RFM is an approved manufactured sand source, therefore "RFM" should be included where appropriate within the cyclic and annual modules (cover sheet, source maps, cross sections, etc…).

05/05/2015 7:06 AM FAX 8458965174 THALLE INDUSTRIES INC 0002/0002

TOWN OF CARMEL

Non-Collusive Bidding Certification

By submission of this bid or proposal, the undersigned bidder(s) (certified) (certify) that to the best of (his) (their) knowledge and belief:

(a) The prices in this bid have been arrived at independently without collusion, consultation, communication, or agreement, as to any matter relating to such prices with any other bidder or with any competitor.

(b) The prices which have been quoted in this bid have not been knowingly disclosed by the bidder and will not knowingly be disclosed by the bidder prior to opening, directly or indirectly, to any other bidder or to any competitor; and

(c) No attempt has been made or will be made by the bidder to induce any other person, partnership or corporation to submit or not to submit a bid.

IN WITNESS WHEREOF, (we) (I) have executed this certificate and affirm the truth of the statements therein set forth under penalty of perjury the 5TH day of NOVEMBER 2015.

(Signature of Individual Signing Bid)

JOHN J. AMATO

THALLE INDUSTRIES, INC

By

Corporate Seal

TOWN OF CARMEL
MAHOPAC, NEW YORK 10541

INFORMATION FOR BIDDERS AND GENERAL SPECIFICATIONS

A. BIDS - GENERAL REQUIREMENTS

1. The date, time, and place of bid opening are given in the Notice to Bidders.
2. All bids received after the time stated in the Notice to Bidders will not be considered and will be returned unopened to the bidder. Whether sent by mail or by means of personal delivery, the bidder assumes responsibility for having his bid deposited on time at the place specified.
3. Any bid which fails to name a price written both in words and figures may be held to be informal and may be rejected. In case of any discrepancy between the price in words and that in figures, the price in words will determine.
4. No charge will be allowed for Federal, State, or municipal sales and excise taxes, since the Town of Carmel is exempt from such taxes. The price bid shall not include the amount of any such tax.
5. Prices shall be net, including transportation and delivery charges fully prepaid by the successful bidder to the destination indicated in the Detailed Specifications. In any case, title shall not pass until items have been delivered and accepted.
6. When bids are requested on a lump-sum basis, bidder must bid on each item in the lump sum group. A bidder desiring to bid "no charge" on an item in a group must so indicate; otherwise, bid for the group may be rejected.
7. All prices quoted must be "per unit" as specified; e.g., do not quote "per case" when "per dozen" is requested; otherwise, bid may be rejected.
8. Bidder must insert the price per unit and the extensions against each item in his bid. In the event of a discrepancy between the unit price and the extension, the unit price will govern. Prices shall be extended in decimals, not fractions.
9. Bids that contain any omissions, alterations, additions or items not called for in the Detailed Specifications, or that are unbalanced, incomplete or contain irregularities of any kind, may be rejected as informal.
10. Conditional or qualified bids will not be accepted.
11. All bids must be submitted in sealed envelopes, bearing on the outside the name of bidder, his address, and the time and date set for the opening of bids.
12. All bids must be accompanied by a fully executed non-collusion statement attached hereto.

B. BIDS - SPECIFIC REQUIREMENTS

1. All specifications are minimum standards, and accepted bid samples do not supersede specifications for quality unless bid sample is superior, in which case deliveries must be the same identity and quality as accepted bid sample.

2. The Town of Carmel reserves the right to request a representative sample of the item quoted prior to the award or prior to shipment. If the sample is not in accordance with the Detailed Specifications, the Town Board may reject the bid; or, if award has been made, cancel the contract at the expense of the successful bidder.
3. In all specifications, the words "or equal" are understood after each article. The decision of the Town Board as to whether an alternate or substitution is in fact equal shall be final. If bidding on items other than those specified, bidder must in every instance give the trade designation of the article, manufacturer's name, and detailed specifications of item he proposes to furnish. Otherwise, bid will be construed as submitted on the identical item as specified.
4. Samples, when required, must be submitted strictly in accordance with instructions; otherwise, bid may not be considered. If samples are requested subsequent to bid opening, they shall be delivered as directed for the bid to have consideration. Samples must be furnished free of charge and must be accompanied by a descriptive memorandum and invoices indicating if the bidder desires their return and specifying the address to which they are to be returned provided they have not been used or made useless by tests. Award samples may be held for comparison with deliveries. The Town of Carmel will not be responsible for any samples destroyed or mutilated by examination or testing. Samples shall be removed by the bidder at his expense. Samples not removed within fifteen (15) days after written notice to the bidder will be regarded as abandoned, and the Town of Carmel shall have the right to dispose of them as its own property.
5. When a specification indicates that an item to be purchased is to be equal to a sample, such sample will be on display at a designated location in the Town of Carmel. Failure on the part of the bidder to examine sample shall not entitle him to any relief from the conditions imposed in the Bid or Detailed Specifications.
6. Bids on equipment must be on standard, unused, new equipment, of latest model, and in current production, unless otherwise specified.
7. All regularly manufactured stock electrical items must bear the label of Underwriters Laboratories, Inc.
8. If the specifications so state, the successful bidder also may be required to furnish a performance bond equal to the full amount of the contract to guarantee the faithful performance of such contract. Such performance bond shall be maintained in full force and effect until the contract shall have been fully performed. The surety company furnishing such performance bond shall be authorized to do business in the State of New York and must be satisfactory to the Town of Carmel. The performance bond shall be executed by the successful bidder at the time of the execution of the contract by the successful bidder and the Town of Carmel.

C. QUALIFICATIONS OF BIDDERS

The Town of Carmel (hereinafter sometimes called the "Town") may make such investigation as it deems necessary to determine the ability and responsibility of the bidder to perform, and the bidder shall furnish to the Town all such information and data

for this purpose as the Town may request. The Town reserves the right to reject any bid if the evidence submitted by or investigation of such bidder fails to satisfy the Town that such bidder is properly qualified and has the financial ability to carry out the obligations of the contract.

D. AWARD OF BID

1. The Contract shall be awarded to the lowest responsible bidder or the proposals will be rejected within forty-five (45) days of the date of opening proposal, subject, however, to the discretionary right reserved by the Town Board to waive any informalities or to reject any or all proposals and to advertise for new proposals, if, in its opinion, the best interest of the Town will thereby be promoted.
2. Where a bidder is requested to submit a bid on individual items and also on a total sum or sums, the right is reserved to award contracts on individual items or on total sums, whichever is in the best interests of the Town of Carmel.
3. If two or more bidders submit identical bids as to price, the decision of the Town Board to award a contract to one of such identical bidders shall be final. (General Municipal Law, Section 103(1).

E. ADDENDA AND INTERPRETATION

1. Bidders are expressly notified that their proposals shall be based upon the materials and products specified. No deviation from the specifications will be considered, except as provided. No interpretation or other contract documents will be made to any bidder orally. Every request for such interpretation should be in writing addressed to: Town of Carmel Supervisor, Town Hall, 60 McAlpin Avenue; Mahopac, New York 10541.
2. Any such request must be received at least five (5) days prior to the date fixed for opening of bids. Any and all such interpretation and any supplemental instructions and/or drawings, which, if issued, will be in the form of addenda, mailed to all prospective bidders (at respective addresses furnished for such purposes) not later than three (3) days prior to the date fixed for the opening of bids. Failure of any bidder to receive any such addendum or interpretation shall not relieve the bidder from any obligation under his bid as submitted. All addenda so issued shall become part of the contract documents.

F. GENERAL OBLIGATIONS OF BIDDERS

The submission of a bid will be construed to mean that the bidder is fully informed as to the extent and character of the supplies, materials, or equipment required and a

representation that the bidder can furnish the supplies, materials, or equipment satisfactorily in complete compliance with the specifications.

G. PURCHASES - MUNICIPAL AND NOT FOR PROFIT ORGANIZATIONS

The Town of Carmel reserves the right to allow all municipal and not for profit organizations authorized under the General Municipal Laws of the State of New York, to purchase any goods and/or services awarded as a result of this Bid in accordance with the latest amendments to NYS GML 100 through 104. However, it is understood that the extension of such contracts are at the discretion of the vendor and the vendor is only bound to any contract between the Town of Carmel and the vendor. Additionally, the Town reserves the right to purchase any goods or services included as part of this Bid from any means legally available to it at any time.

H. GUARANTEES BY THE BIDDERS

1. The successful bidder guarantees his products against defective material or workmanship and agrees to repair or replace any damages occasioned in transit.
2. The successful bidder guarantees to furnish adequate protection from damage for all work and to repair damages of any kind for which he or his workmen are responsible, to the building or equipment, to his own work or to the work of other successful bidders.
3. The successful bidder guarantees to carry adequate insurance to protect the Town of Carmel from loss in case of accident, fire, theft, etc.
4. The successful bidder guarantees that all deliveries will be equal to the accepted bid sample.
5. The successful bidder guarantees that the equipment delivered is standard, new, has never been used, and is the latest model of regular stock product or as required by the specifications; also that no attachment or part has been substituted or applied contrary to manufacturer's recommendations and standard practice. Every unit delivered must be guaranteed against faulty material and workmanship for a period of at least one (1) year from date of delivery. If during this period such fault develops, the successful bidder agrees to replace the unit or the part affected without cost to the Town of Carmel.
6. The successful bidder guarantees any merchandise provided under the contract which is or becomes defective during the guarantee period shall be replaced by the successful bidder free of charge with the specific understanding that all replacements shall carry the same guarantee as the original equipment. The successful bidder shall make any such replacement immediately upon receiving notice from the Town of Carmel.

I.DELIVERY

1. Delivery must be made in accordance with the Detailed Specification. If delivery instructions do not appear, it will be interpreted to mean prompt delivery to the Town Hall, 60 McAlpin Avenue, Mahopac, New York 10541.
2. The Town of Carmel will not accept any deliveries on Saturdays, Sundays or legal holidays, except where the delivery is for an emergency.

3. Items shall be securely and properly packed for shipment, storage, and stocking in shipping containers and according to accepted commercial practice without extra charge for packing cases, baling, or sacks.
4. The successful bidder shall be responsible for delivery of items in good condition at point of destination. Bidder shall file with the carrier all claims for breakage, imperfections, and other losses, which will be deducted from invoices. The Town will note for the benefit of successful bidder when packages are not received in good condition.
5. Unless otherwise stated in the specifications, all items must be delivered to and placed at a point within the building as directed by the shipping instruction of the agent for the Town of Carmel. The successful bidder will be required to furnish proof of delivery in every instance.
6. Unloading and placing of the equipment is the responsibility of the successful bidder, and the Town of Carmel accepts no responsibility for unloading and placing of equipment. Any costs incurred due to the failure of the successful bidder to comply with this requirement will be charged to him. No help for unloading will be provided by the Town of Carmel, and suppliers should notify their truckers according.

J. CONTRACT

1. Execution
   (a) Each bid will be received with the understanding that upon the written acceptance by the Town Board of part or all of the bid, the bidder will execute a contract of purchase. Said contract of purchase will obligate the successful bidder to furnish those items accepted by the Town of Carmel in accordance with all of the provisions of the bid. Said contract of purchase shall be executed by the successful bidder within ten (10) days of the receipt by the bidder of the Town Board's written acceptance and must be immediately returned to the Town. Failure to execute the contract of purchase within said ten (10) days or to immediately return the executed contract shall cause the bid security to be forfeited, without recourse to the Town, as liquidated damages for such failure. The written acceptance of the bid will become null and void upon the expiration of said ten (10) days, and the bidder shall be deemed to have abandoned any and all rights under the bid and the contract unless the bidder has executed the contract of purchase and immediately returned same.
   (b) The placing in the mail of a notice of acceptance to a successful bidder to the address given in the bid will be considered sufficient notice of acceptance of the bid, and said acceptance will be deemed to be received by the successful bidder three (3) days after mailing.
2. Performance
   (a) If the successful bidder fails to deliver as ordered, or within the time specified, or within reasonable time as interpreted by the Town of Carmel, or fails to make immediate replacement of rejected articles when so requested or as directed by the Town of Carmel, the Town of Carmel may purchase from other sources to take the place of the item rejected or not delivered. The Town of Carmel reserves the right to authorize immediate purchase from other sources against rejections on any contract when necessary. On all other purchases, the successful bidder agrees

to reimburse the Town of Carmel promptly for excess costs occasioned by such purchases. Should the cost be less, the successful bidder shall have no claim to the difference. Such purchases will be deducted from contract quantity.

(b) A contract may be cancelled by the Town at the successful bidder's expense upon non-performance of contract.

(c) It is mutually understood and agreed that the successful bidder shall not assign, transfer, convey, sublet or otherwise dispose of the contract or his right, title, or interest therein, or his power to execute such contract, to any other person, company, or corporation, without the previous written consent of the Town of Carmel.

3. Payments

(a) Payment will be made only after correct presentation of a Town of Carmel Voucher with invoices attached, as may be required.

(b) Payments of any claim shall not preclude the Town of Carmel from making claim for adjustment on any item found not to have been in accordance with the contract specifications.

4. Saving Clause

The successful bidder shall not be held responsible for any losses resulting if the fulfillment of the terms of the contract shall be delayed or prevented by wars, acts of public enemies, strikes, fires, floods, acts of God, or for any other acts not within the control of the successful bidder and which by the exercise of reasonable diligence he is unable to prevent.

NOTE: NON-COLLUSIVE BIDDING STATEMENT MUST BE SUBMITTED WITH EACH BID. THE ENCLOSED FORM, "NON-COLLUSION STATEMENT", MEETS THIS REQUIREMENT.

Thalle Industries

John J. Amato
Sales Manager

Quarry
172 Route 9
Fishkill, NY 12524
P (845) 896-5156 x106
F (845) 896-0161
C (914) 490-7328
E jamato@thalleindustries.com
www.thalleindustries.com

Office 51 Route 100
Briarcliff Manor, NY 10510
P (914) 762-3415 x118
F (914) 762-5726

"BID" SAND

Thursday - 11/5/15 - 11:00 AM

3

RECEIVED
NOV 05 2015
TOWN OF CARMEL
TOWN CLERK
Ann Sappard

Town of Carmel
60 McAlpin Ave.
Mahopac, NY 10541

TOWN OF CARMEL HIGHWAY DEPARTMENT
MAHOPAC, NEW YORK 10541

1

BID FORM AND SPECIFICATIONS
FOR

WINTER MIX

WINTER MIX: NYS OGS Group 31504, Bituminous Concrete Cold Patch

F.O.B. BIDDER'S PLANT:

One Hundred and Four dollars $ 104.00 per ton
(Price per ton written in words)

Three Hundred two dollars and Forty ¢ $ 302.40 per pallet
(Price per pallet written in words) 60# All Weather Patch @ $6.40 each

Mileage Adjustment as detailed below:

Three Dollars and seventy cents $ 3.70 per ton
(Adjustment written in words)

PRICE ADJUSTMENT: (Escalation Clause):

In view of the energy crisis, asphalt cement prices may fluctuate. To adjust for price fluctuations, the bidder shall use $504.00 per ton, the NYS DOT Base Average F.O.B. Terminal Price for Asphalt Cement as of October 2015.

In requesting payment, the vendor shall invoice for the number of gallons at the bid price. An additional statement on the same invoice form will designate the adjustment based on the percentage of asphalt cement in the liquid material. This will be either an additional payment to the vendor or a credit from the vendor if the asphalt cement cost F.O.B Terminals is over or under the established Base Price.

PRICE ADJUSTMENT:

Percentage of Asphalt x Adjustment Price = gallon of liquid
(Adjustment Price = New FOB Terminals Price - $504.00 Base Price)

Documentation to substantiate the price of _____ must be submitted with the invoice.

MILEAGE ADJUSTMENT: To determine the lowest bidder on FOB bids, the Town of Carmel shall adjust each FOB bid by adding to the bid price an amount equal to the sum obtained by multiplying $.25 x the distance in miles between the Town of Carmel Highway Garage at 55 McAlpin Avenue, Mahopac, New York, to the bidder's FOB point of delivery.

Dated: 10-27-15

W. A. Yolk
Representative's Signature
Package Pavement Co.
Bidder's Legal Name
P.O. Box 408, Stormville, NY
Address
845-221-2224
Telephone
845-221-0433
FAX

BID MUST BE SUBMITTED ON THIS FORM

TOWN OF CARMEL

Non-Collusive Bidding Certification

By submission of this bid or proposal, the undersigned bidder(s) (certified) (certify) that to the best of (his) (their) knowledge and belief:

(a) The prices in this bid have been arrived at independently without collusion, consultation, communication, or agreement, as to any matter relating to such prices with any other bidder or with any competitor.

(b) The prices which have been quoted in this bid have not been knowingly disclosed by the bidder and will not knowingly be disclosed by the bidder prior to opening, directly or indirectly, to any other bidder or to any competitor; and

(c) No attempt has been made or will be made by the bidder to induce any other person, partnership or corporation to submit or not to submit a bid.

IN WITNESS WHEREOF, (we) (I) have executed this certificate and affirm the truth of the statements therein set forth under penalty of perjury the Oct. 27th day of 2015.

(Signature of Individual Signing Bid)

V.P. Package Pavement Co., Inc
P.O. Box 408
Stormville, NY 12582

By Michael S. Holt

Corporate Seal

PACKAGE PAVEMENT
P.O. BOX 408
STORMVILLE, NY 12582
www.packagepavement.com

RECEIVED
OCT 29 2015
Ann Sappard
TOWN OF CARMEL TOWN CLERK

UNITED STATES POSTAGE PITNEY
02 1P $ 000.
0000859581 OCT 27
MAILED FROM ZIP CODE

1

Office of Town Clerk
& the Town of Carmel
Town Hall
60 McAlpin Ave
Mahopac NY 10541

"BID" "Winter Mix"
November 5, 2015

TOWN OF CARMEL

MAHOPAC, NY 10541

1

BID FORM

FOR

GALVANIZED GUIDERAIL

CORTEN (RUSTIC) GUIDERAIL

TIMBER GUIDERAIL

(PER BIDS ON ATTACHED SPECIFICATIONS)

Representative's Signature Carl H Perine

Chemung Supply Corp.
Bidder's Legal Name

PO Box 527
Address

Elmira, NY 14902

607-733-5506
Telephone Number

Date: 10/28/15

BIDS MUST BE SUBMITTED WITH THIS FORM

TOWN OF CARMEL HIGHWAY DEPARTMENT

MAHOPAC, NEW YORK 10541

SPECIFICATIONS

FOR

Galvanized Guide Rail

Bidders must be able to furnish both materials and installation of all guide rail according to New York State specifications. All materials to conform to NYS DOT specification section 606 and standard 606.6 12 gauge and 106-3R1 12 gauge.

Guide rail bidder must submit a $5,000.00 bid bond to guarantee delivery of material and performance of work.

Guide rail bidder must submit a certificate of insurance in the amount of equal to or exceeding $1,000,000.00 per occurrence, annual aggregate providing personal injury, bodily injury and property damage liability coverage.

FURNISH AND INSTALL NEW GALVANIZED GUIDE RAIL:

1. Galvanized corrugated beam rail, 12 foot 6 inch post spacing, installed to NYS DOT specifications.

   Complete layout and installation $ 22.94 per linear foot.

2. Galvanized corrugated beam rail, 12 foot 3 inch post spacing, installed to NYS DOT specifications.

   Complete layout and installation $ 26.14 per linear foot.

3. Galvanized 6 inch X 6 inch box beam rail including all spliced plates, hardware, etc. installed to NYS DOT specifications.

   Complete layout and installation $ 46.74 per linear foot.

   Using type one end sections $ 744.00 each, installed.

   Using type two end sections $ 1394.00 each, installed.

4. 6 inch X 6 inch box beam rail shop cut and mitered curve $ 74.20 per linear foot.

BID MUST BE SUBMITTED ON THIS FORM

TOWN OF CARMEL HIGHWAY DEPARTMENT

MAHOPAC, NEW YORK 10541

SPECIFICATIONS

FOR

Corten Guide Rail

Bidders must be able to furnish both materials and installation of all guide rail according to New York State specifications. All materials to conform to NYS DOT specification section 606 and standard 606.6 12 gauge and 106-3R1 12 gauge.

Guide rail bidder must submit a $5,000.00 bid bond to guarantee delivery of material and performance of work.

Guide rail bidder must submit a certificate of insurance in the amount of equal to or exceeding $1,000,000.00 per occurrence, annual aggregate providing personal injury, bodily injury and property damage liability coverage.

FURNISH AND INSTALL NEW CORTEN (RUSTIC) GUIDE RAIL:

1. Corten corrugated beam rail, 12 foot 6 inch post spacing, installed to NYS DOT specifications.

   Complete layout and installation $ 23.84 per linear foot.

2. Corten corrugated beam rail, 12 foot 3 inch post spacing, installed to NYS DOT specifications.

   Complete layout and installation $ 26.44 per linear foot.

3. Corten 6 inch X 6 inch box beam rail including all spliced plates, hardware, etc. installed to NYS DOT specifications.

   Complete layout and installation $ n/a per linear foot.

   Using type one end sections $ n/a each, installed.

   Using type two end sections $ n/a each, installed.

4. 6 inch X 6 inch box beam rail shop cut and mitered curve $ n/a per linear foot.

BID MUST BE SUBMITTED ON THIS FORM

TOWN OF CARMEL

DETAILED SPECIFICATIONS
TIMBER GUIDERAIL FOR ROADSIDE PROJECTS AND MAINTENANCE

Vendors to furnish and install at specified sites, Timber or Timbercladd guiderail systems, for public roadsides and bridges, meeting applicable State and Federal Standards.

GENERAL NOTES

The Department seeks a unit price per foot to supply all labor, materials, and equipment necessary to complete the work in compliance with Section 597 M of the *Standard Specifications for Construction and Materials* of the New York State Department of Transportation dated January 2, 1995 and addenda, or as detailed by these specifications.

DESCRIPTION OF ITEM

Roadside Timber Guide Rail is to be installed to the lines and grades given in the project drawings and shall comply with the general requirements of Box Beam Type railing, as depicted in Standard Structure Sheets 606-3R4 and as modified herein.

The rail system shall consist of a 203 mm diameter round timber rail with a 6 mm thick steel C channel (60 mm by 121 mm) embedded into and bolted to the timber rail. The composite rail shall be attached to 1600 mm long 63x5.7 steel posts set 965 mm into the soil and spaced 3000 mm on centers. Each post shall include a 203 mm by 510 mm soil plate. The above-ground section of each post shall be covered by a routed, 171 mm diameter timber post which functions like a standard guiderail block while providing an all-wood appearance to the barrier from the roadside of the installation. Nominal rail height must be 660 mm, with a maximum of 685 mm. above mean ground surface. Rail sections shall be joined using a 6 bolt, 12 mm (114 mm by 685 mm) splice bar.

Rail elements shall be fabricated from pressure treated Douglas fir with an Equal to 1,000 Ksi and a Modulus of Rupture of 7,100 PSI or greater. Wood posts shall be pressure treated Red Pine No 2, with an E equal to 1,100 PSI and Fb equal to 875 Psi or greater. All Steel shall conform to ASTM A36 and be Hot Dipped Galvanized per ASTM A123. All Steel hardware shall conform to ASTM A307 and be galvanized per ASTM A153. All wood products shall be pressure treated in conformance with Section 708-31 or Section 708-32 of the *NYSDoT Standard Specifications*.

1) Ironwood guide rail, price per L.F. complete
   A. 1' - 100 L.F. $ 108.40
   B. 100' and over $ 94.60

2) End terminal, type 1 timber rail complete $ 1594.00 each

3) End terminal, type 11 timber rail complete $ 2464.00 each

4) Anchorage unit for ironwood guide rail, back slope $ 2464.00 each

TOWN OF CARMEL

Non-Collusive Bidding Certification

By submission of this bid or proposal, the undersigned bidder(s) (certified) (certify) that to the best of (his) (their) knowledge and belief:

(a) The prices in this bid have been arrived at independently without collusion, consultation, communication, or agreement, as to any matter relating to such prices with any other bidder or with any competitor.

(b) The prices which have been quoted in this bid have not been knowingly disclosed by the bidder and will not knowingly be disclosed by the bidder prior to opening, directly or indirectly, to any other bidder or to any competitor; and

(c) No attempt has been made or will be made by the bidder to induce any other person, partnership or corporation to submit or not to submit a bid.

IN WITNESS WHEREOF, (we) (I) have executed this certificate and affirm the truth of the statements therein set forth under penalty of perjury the 28th day of 20 15, October.

(Signature of Individual Signing Bid)

Chemung Supply Corp.

By Carl H Perine Vice-President

Corporate Seal

Selective Insurance Company of America
40 Wantage Avenue
Branchville, New Jersey 07890
973-948-3000

B 1165768

BID BOND

KNOW ALL MEN BY THESE PRESENTS:

That **Chemung Supply Corp**
2420 Corning Rd Elmira Heights, NY 14903 (hereinafter called the Principal)
as Principal, and the SELECTIVE INSURANCE COMPANY OF AMERICA, a corporation created and existing under the laws of the State of New Jersey, with its principal office in Branchville, New Jersey (hereinafter called the Surety), as Surety,

are held and firmly bound unto **Town of Carmel**
60 McAlpin Ave Mahopac, NY 10541
(hereinafter called the Obligee)

in the full and just sum of **Five Thousand Dollars**
($ 5,000.00), good and lawful money of the United States of America, to the payments of which sum of money well and truly to be made, the said Principal and Surety bind themselves, their and each of their heirs, executors, administrators, successors and assigns, jointly and severally, firmly by these presents.

Signed, sealed and dated this **27th** day of **October** A.D. **2015** .

THE CONDITION OF THIS OBLIGATION IS SUCH, That, if the Obligee shall make any award within 60 days to the Principal for **furnish & install guide rail materials**

according to the terms of the proposal or bid made by the Principal therefor, and the Principal shall duly make and enter into a contract with the Obligee in accordance with the terms of said proposal or bid and award and shall give bond for the faithful performance thereof with Surety or Sureties approved by the Obligee; or if the Principal shall, in case of failure so to do, pay to the Obligee the damages which the Obligee may suffer by reason of such failure, not exceeding the penalty of this bond, then this obligation shall be null and void; otherwise it shall be and remain in full force and effect.

In Testimony Whereof, the Principal and Surety have caused these presents to be duly signed and sealed.

WITNESS:

_____
(If individual or Firm)

ATTEST:

_____
(If Corporation)

Chemung Supply Corp
_____(SEAL)
_____(SEAL)
Marc P. Stemerman President (SEAL)
Principal

SELECTIVE INSURANCE COMPANY OF AMERICA
By: Bonnie J Wilson
Attorney-in-Fact
Bonnie J Wilson

B-201 (1/86)

ACKNOWLEDGMENT OF PRINCIPAL
(Individual or Partnership)

STATE OF _____
COUNTY OF _____ } ss:

On this _____ day of _____ , _____ ,before me personally appeared the above named _____

to me known and known to me to be the same described in and who executed the above instrument and dully acknowledged the execution of the same.

_____
Notary Public _____ County

(Corporation)

STATE OF New York
COUNTY OF Chemung } ss:

On this 29th day of October , 2015 ,before me personally appeared Marc P. Stemerman

to me known , who, being by me duly sworn, did depose and say that he/she resides in Elmira, NY

that he/she is the President of Chemung Supply Corp.
the corporation described in and which executed the foregoing instrument; that he/she knows the seal of said corporation; that the seal affixed to said instrument is such corporate seal; that it was affixed by order of the Board of Directors of said corporation and that he/she signed his/her name thereto by like order.

SUSANNE M. CARRIER
Notary Public, State of New York
Chemung County No. 01CA4776554
Commission Expires December 31, 20 18

Susanne M Carrier
Notary Public Chemung County

ACKNOWLEDGMENT OF SURETY

STATE OF PA
COUNTY OF Bradford } ss:

On this 27th day of October , 2015 ,before me personally appeared Bonnie J Wilson to me known, who, being by me duly sworn, did depose and say that he/she resides in Rome, PA
that he/she is the Attorney-in-Fact of the Selective Insurance Company of America
the corporation described in and which executed the foregoing instrument; that he/she knows the seal of said corporation; that the seal affixed to said instrument is such corporate seal; that it was so affixed by order of the Board of Directors of said corporation and that he/she signed his/her name thereto by like order; and deponent further says that he/she is acquainted with Bonnie J Wilson and knows him/her to be the Attorney-in-Fact subscribed to the within instrument is in the genuine handwriting of the said Bonnie J Wilson and was subscribed thereto by like order of the Board of Directors in the presence of deponent.

NOTARIAL SEAL
GAYLE S. MORSE, Notary Public
Athens Borough, Bradford County
My Commission Expires January 24, 2019

Gayle S. Morse
Notary Public Bradford County

SELECTIVE®

Selective Insurance Company of America
40 Wantage Avenue
Branchville, New Jersey 07890
973-948-3000

BondNo.B 1165768

POWER OF ATTORNEY

Public Bid

SELECTIVE INSURANCE COMPANY OF AMERICA, a New Jersey corporation having its principal office at 40 Wantage Avenue, in Branchville, State of New Jersey ("SICA"), pursuant to Article VII, Section 1 of its By-Laws, which state in pertinent part:

> The Chairman of the Board, President, Chief Executive Officer, any Executive Vice President, any Senior Vice President or any Corporate Secretary may, from time to time, appoint attorneys in fact, and agents to act for and on behalf of the Corporation and they may give such appointee such authority, as his/her certificate of authority may prescribe, to sign with the Corporation's name and seal with the Corporation's seal, bonds, recognizances, contracts of indemnity and other writings obligatory in the nature of a bond, recognizance or conditional undertaking, and any of said Officers may, at any time, remove any such appointee and revoke the power and authority given him/her.

does hereby appoint **Bonnie J Wilson**

, its true and lawful attorney(s)-in-fact, full authority to execute on SICA's behalf fidelity and surety bonds or undertakings and other documents of a similar character issued by SICA in the course of its business, and to bind SICA thereby as fully as if such instruments had been duly executed by SICA's regularly elected officers at its principal office, in amounts or penalties not exceeding the sum of: **Fifty Thousand Dollars ($50,000.00)**

Signed this **27th** day of **October**, **2015**

SELECTIVE INSURANCE COMPANY OF AMERICA

By: _____
Brian C. Sarisky
Its Executive VP, Head of Specialty Insurance

SELECTIVE INSURANCE COMPANY OF AMERICA CORPORATE SEAL 1926 NEW JERSEY

CERTIFIED COPY

STATE OF NEW JERSEY :
:ss. Branchville
COUNTY OF SUSSEX :

On this **27th** day of **October**, **2015** before me, the undersigned officer, personally appeared Brian C. Sarisky, who acknowledged himself to be the Vice President of SICA, and that he, as such Vice President, being authorized so to do, executed the foregoing instrument for the purposes therein contained, by signing the name of the corporation by himself as Vice President and that the same was his free act and deed and the free act and deed of SICA.

Charlene Kimble
Notary Public of New Jersey
My Commission Expires 6/2/2016

Notary Public

CHARLENE KIMBLE NOTARY PUBLIC NEW JERSEY
BondNo.B 1165768

The power of attorney is signed and sealed by facsimile under and by the authority of the following Resolution adopted by the Board of Directors of SICA at a meeting duly called and held on the 6th of February 1987, to wit:

"RESOLVED, the Board of Directors of Selective Insurance Company of America authorizes and approves the use of a facsimile corporate seal, facsimile signatures of corporate officers and notarial acknowledgements thereof on powers of attorney for the execution of bonds, recognizances, contracts of indemnity and other writing obligatory in the nature of a bond, recognizance or conditional undertaking."

CERTIFICATION

I do hereby certify as SICA's Corporate Secretary that the foregoing extract of SICA's By-Laws and Resolution are still in force and effect and this Power of Attorney issued pursuant to and in accordance with the By-Laws is valid.

Signed this **27th** day of **October**, **2015**.

Michael H. Lanza, SICA Corporate Secretary

SELECTIVE INSURANCE COMPANY OF AMERICA CORPORATE SEAL 1926 NEW JERSEY

Important Notice: If the bond number embedded within the Notary Seal does not match the number in the upper right-hand corner of this Power of Attorney, contact us at 973-948-3000.

B91 (4-14)

SELECTIVE®

Selective Insurance Company of America
40 Wantage Avenue
Branchville, New Jersey 07890
973-948-3000

BondNo.B 1165768

STATEMENT OF FINANCIAL CONDITION

Public Bid

I hereby certify that the following information is contained in the Annual Statement of Selective Insurance Company of America ("SICA") to the New Jersey Department of Banking and Insurance as of December 31, 2014:

ADMITTED ASSETS (in thousands)		LIABILITIES AND SURPLUS (in thousands)	
Bonds	$1,303,728	Reserve for losses and loss expenses	$925,453
Preferred stocks at convention value	0	Reserve for unearned premiums	303,624
Common stocks at convention values	133,163	Provision for unauthorized reinsurance	1,646
Subsidiary common stock at convention values	0	Commissions payable and contingent commissions	22,483
Short-term investments	52,485	Other accrued expenses	19,802
Mortgage loans on real estate (including collateral loans)	35,961	Other liabilities	278,639
Other invested assets	71,670	Total liabilities	1,551,647
Interest and dividends due or accrued	13,300		
Premiums receivable	294,449	Surplus as regards policyholders	492,968
Other admitted assets	139,859		
Total admitted assets	2,044,615	Total liabilities and surplus as regards policyholders	2,044,615

I further certify that the following is a true and exact excerpt from Article VII, Section 1 of the By-Laws of SICA, which is still valid and existing.

> The Chairman of the Board, President, Chief Executive Officer, any Executive Vice President, any Senior Vice President or any Corporate Secretary may, from time to time, appoint attorneys in fact, and agents to act for and on behalf of the Corporation and they may give such appointee such authority, as his/her certificate of authority may prescribe, to sign with the Corporation's name and seal with the Corporation's seal, bonds, recognizances, contracts of indemnity and other writings obligatory in the nature of a bond, recognizance or conditional undertaking, and any of said Officers may, at any time, remove any such appointee and revoke the power and authority given him/her.

IN WITNESS WHEREOF, I hereunto subscribe my name and affix the seal of SICA, this 6 day of March 2015.

Michael H. Lanza
SICA Corporate Secretary

SELECTIVE INSURANCE COMPANY OF AMERICA CORPORATE SEAL 1926 NEW JERSEY

STATE OF NEW JERSEY :
:ss. Branchville
COUNTY OF SUSSEX :

On this 6 day of March 2015, before me, the undersigned officer, personally appeared Michael H. Lanza, who acknowledged himself to be the Corporate Secretary of SICA, and that he, as such Corporate Secretary, being authorized so to do, executed the foregoing instrument for the purposes therein contained, by signing the name of the corporation by himself as Corporate Secretary.

Notary Public
My Commission Expires:

Charlene Kimble
Notary Public of New Jersey
My Commission Expires 6/2/2016

CHARLENE KIMBLE NOTARY PUBLIC NEW JERSEY

Selective Insurance Company of America
40 Wantage Avenue
Branchville, New Jersey 07890
973-948-3000

BondNumberB 1165768

SURETY DISCLOSURE STATEMENT AND CERTIFICATION

Selective Insurance Company of America, surety on the attached bond, hereby certifies the following:

(1) The surety meets the applicable capital and surplus requirements of R.S.17:17-6 or R.S.17:17-7 as of the surety's most current annual filing with the New Jersey Department of Banking and Insurance.

(2) The capital and surplus, as determined in accordance with the applicable laws of the State of New Jersey, of the surety issuing the attached bond are in the following amounts as of the calendar year ended December 31, 2014, which amounts have been certified by certified public accountants:

Company	Capital	Surplus	CPA
Selective Insurance Company of America	$4,400,000	$492,967,395	KPMG LLP 345 Park Avenue New York, NY 10154

(3) With respect to the surety issuing the attached bond that has received from the United States Secretary of the Treasury a certificate of authority pursuant to 31 U.S.C. sec 9305, the underwriting limitation established therein and the date as of which the limitation was effective is as follows:

Company	Underwriting Limitation	Effective Date
Selective Insurance Company of America	$49,297,000	July 1, 2015

(4) The amount of the bond to which this statement and certification is attached is
$ 50,000.00

CERTIFICATE

(To be completed by an authorized certifying agent/officer for each surety on the bond)

I, Timothy A. Marchio, as Vice President, Bond SBU for Selective Insurance Company of America, a corporation domiciled in New Jersey, DO HEREBY CERTIFY that, to the best of my knowledge, the foregoing statements made by me are true, and ACKNOWLEDGE that, if any of those statements are false, this bond is VOIDABLE.

Timothy A. Marchio
(Signature of certifying agent/officer)

Timothy A. Marchio
(Printed name of certifying agent/officer)

Vice President, Bond SBU
(Title of certifying agent/officer)

Dated: October 27th 2015
(month, day, year)

B-98 (7/15)

SELECTIVE®

ALL NOTICES REGARDING CLAIMS AGAINST THIS BOND MUST BE MAILED OR FAXED TO:

SELECTIVE INSURANCE COMPANY OF AMERICA
Attention: BOND CLAIMS
P.O. Box 7265
London, KY 40742

Email address: CSVCenter@selective.com

Telefax: 866-324-3471

Phone: 866-455-9969

CHEMUNG SUPPLY CORP.
P. O. BOX 527
ELMIRA, N. Y. 14902

RECEIVED
NOV 0 2 2015
TOWN OF CARMEL
TOWN CLERK
Ann Spofford

1

Town of Carmel
Town Clerk
Town Hall
60 McAlpin Ave
Mahopac, NY 10541

BID: GUIDE RAIL
DUE: 11/5 11:00

#7

☑ Work Session 12/9/15

☐ Agenda

Beam Mack Sales Service, Inc.

6260 E Molloy Rd.

E Syracuse, NY 13057

ONONDAGA COUNTY HEAVY TRUCK CLASS 8 STATEWIDE CONTRACT

7823

CONTRACT PRICING MATRIX FOR MACK GRANITE GU7, GU8

CUSTOMER: Town of Carmel

CHASSIS QUOTED: GU712 Allison 4500RDS 5 speed	CHASSIS BASE PRICE	CHASSIS OPTIONS	TOTAL
MACK GRANITE. GU712 2017 model year	$188,673.00		
DISCOUNT FROM LIST 48.00%	$90,563.04		
CHASSIS PRICE less 48% DISCOUNT	$98,109.96		
OPTIONS LIST PRICE FROM MACK TRAC		$30,224.00	
OPTIONS DISCOUNT FROM LIST PRICE 38.75%		$11,924.93	
OPTION PRICE LESS 38.75% =		$18,849.08	
CHASSIS PRICE WITH CONTRACT OPTIONS AND DISCOUNT =			$116,959.04
Net Contract Items:Engine plan 2 60 Mo./ Allison 60mo P&L Warranty			$3,046.00
TOTAL WITH NON CONTRACT OPTIONS =			$120,005.04
LESS MUNICIPAL DISCOUNT =			$0.00
DELIVERY CHARGE FROM CHART			$290.00
ALLISON TRANSMISSION NET PRICING			$10,440.00
TOTAL PRICE FOR CHASSIS WITH ALL OPTIONS DELIVERED			$130,735.04
LIST PRICE FOR BODY & PLOW EQUIPMENT			$160,483.13
CONTRACT DISCOUNT 30%			$48,144.94
TOTAL PRICE FOR BODY & Plow equipment :			$112,338.19
TOTAL PRICE FOR COMPLETE TRUCK:			**$243,073.23**

Sincerely, Greg Angwin

12/1/2015

PROPOSAL

Especially Prepared For:

Town of Carmel

, NY

Presented By:

Greg Angwin
Beam Mack Sales & Service

6260 E. Molly Rd
Syracuse, NY 13057
grega@beammack.com

Especially Prepared For:

Town of Carmel

, NY

RE: MACK GRANITE AXLE FORWARD (GU712)
SNOW PLOW. . . . . On/Off Hwy

,

Thank you for the opportunity to review your current truck needs and present this proposal. The accompanying proposal has been prepared to give you the complete specifications and performance details of the unit best suited for your operations. Today, as costs continue to rise, we know you demand a truck that will be the most economical in the long run. Several factors that I believe are important in achieving this goal are:

* Improved Fuel Economy

* Reduced Maintenance

* Improved Productivity

* High Resale Value

The enclosed specifications and recommendations have been carefully designed to meet all these objectives. I think that after reviewing this proposal you will come to the same conclusion that so many operators are coming to:

"MACK Has What It Takes!!"

I look forward to meeting with you and to discuss any questions you might have regarding this proposal.

Sincerely,

Greg Angwin
Beam Mack Sales & Service

Table of Contents

Standard Cover Page	1
Summary Page	4
Specification	5
Warranty Summary	14
Performance Report	15
GVW Specifications	16

CHASSIS SPECIFICATIONS SUMMARY

December 01, 2015

2017 MACK GU712

SNOW PLOW. . . . . On/Off Hwy
STRAIGHT TRUCK WITH TRAILER

Engine	MACK MP7-365C 365HP	**Transmission** **Clutch**	4500-RDS-5 OMIT CLUTCH
Front Axle **Suspension**	20,000# FXL20 20,000#	**Rear Axle** **Suspension**	30,000# RS-30-185 Ratio 4.89 30,000# MULTILEAF
Tires	Front: 315/80R22.5 Rear: 12R24.5	**Wheels**	22.5x9.0 STEEL DISC (10-HOLE) 24.5x8.25 STEEL DISC (10 HOLE)
Ratings	GVW: 48,640# GCW: 65,000#	**Fuel Tanks**	LH: 72gal
Fifth Wheel		**Sleeper**	

Total Quantity: 1 **Estimated Total Weight:** 14,976# **Reference#:** AHXX020117A

X_____ _____
Customer Signature **Date**

Prepared For:
Town of Carmel

, NY
Phone: --
Fax: --

X_____ _____
Dealer Signature **Date**

Presented By:
Greg Angwin
Beam Mack Sales & Service

Syracuse, NY 13057
877-696-6225
grega@beammack.com

Prepared For:
Town of Carmel

, NY

Presented By:
Beam Mack Sales & Service
6260 E. Molly Rd
Syracuse, NY 13057
877-696-6225
grega@beammack.com

Dec 1, 2015
2017 GU712
Ref#: AHXX020117A

Pid Code	Description	
	ORDER/CUSTOMER/VEHICLE INFORMATION	
5050011	INITIAL REGISTRATION LOCATION, UNITED STATES, NEW YORK	Opt
5340001	LANGUAGE, ENGLISH	Std
CIR0002	IDLE EMISSION CERTIFICATION, IDLE EMISSION CERTIFICATION - CARB 08	Opt
0130002	TYPE OF SERVICE, MUNICIPAL	Opt
APP0003	VEHICLE APPLICATION CLASS, HEAVY VOCATIONAL - Unlimited operation on concrete, asphalt, or maintained gravel/packed dirt with a maximum 3% grade; limited operation on unmaintained surfaces with maximum 5% grade; limited operation on concrete, asphalt, or maintained gravel/packed dirt with maximum 10% grade. (3 AXLES) 78,000 lbs (35,281 kg) MAX GVW. (4 AXLES) 80,000 lbs (36,288 kg) MAX GVW.	Opt
CAR0001	CARRIER APPLICATION, NOT AVAILABLE	Inc
0010002	VEHICLE TYPE, STRAIGHT TRUCK WITH TRAILER	Inc
0061799	VEHICLE USE AND BODY/TRAILER TYPE, SNOW PLOW. . . . . On/Off Hwy	
GCW0065	65000# (29484 kg) GCW RATING	Opt
6450310	BRAKE - STOPPING DISTANCE, BRAKE REGULATION, STOPPING DISTANCE 94M (310FT)	Std
PB1017A	PRICE BOOK LEVEL, 2017A PRICE BOOK LEVEL	Std
PC10028	PRODUCT CLASS, PRODUCT CLASS 28	Opt
	OPERATING CONDITIONS	
M390001	TOPOGRAPHY, GRADES <3% GREATER THAN 98% OF DRIVING DISTANCE MAX GRADE 8%	Opt
APC0003	TRANSPORTATION CYCLE, VOCATIONAL	Std
M440010	ROAD CONDITION, WELL MAINTAINED SURFACED ROADS >95% DRIVING DISTANCE	Opt
M400001	AMBIENT TEMPERATURE UPPER LIMIT, AMBIENT TEMPERATURE HOT. WARMER THAN 104 F (40 C) ALLOWED UP TO 25 HOURS PER YEAR	Opt
	BVS	
0021413	CHASSIS (BASE MODEL), GU702 4-WHEEL TRUCK	Std
PK7CB7A	CHASSIS PACKAGING SOLUTIONS, CLEAR BOC PACKAGE 7A INCLUDES: HHF Emission, B Box LH	Std
MAB0000	Rail, Air Tank(s) Under B Box - remaining on rail, Cab Mounted Exhaust REQUIRES: 72 Gallon LH Sleeved Fuel Tank, Omit RH Tank,, WITHOUT FRONT AXLE SPACING	
	ENGINE/TRANSMISSION/CLUTCH	
1001642	**ENGINE, MACK MP7-365C 365 HP @1450-1700 RPM (PEAK) 1460 LB. FT. MAX. TORQUE @ 1100-1300 RPM**	Opt
1364539	TRANSMISSION, 5 SPEED AUTOMATIC, ALLISON 4500-RDS-5 (4.70/0.76) RUGGED DUTY SERIES GEN 5 INCLUDES DIRECT MOUNT OIL, INTERNAL FILTER, AND OIL LEVEL SENSOR.	
1330000	CLUTCH, OMIT CLUTCH	Inc
	EXHAUST/EMISSIONS	
DPF0104	DPF, CLEARTECH HHF, DPF & SCR FRAME MTD, BOTH RH SIDE UNDER CAB	Inc
EAS0102	EXHAUST AFTER-TREATMENT SYSTEM, EXHAUST AFTER-TREATMENT SYSTEM DIESEL PARTIC FILTER CERAMIC PASSIVE REGEN	Std
1305101	EXHAUST, EXHAUST - CLEAR BOC, SINGLE (R/S) VERT EXHAUST CAB MOUNTED, LOWER VENTURI DIFFUSER, TURNED END	Opt
0100002	SINGLE, BRIGHT FINISH HEAT SHIELD, STACK AND SCR COVER	Opt
B600004	**FURNISH STEEL PAINTED HEAT SHIELD FOR FRAME MTD MACK CAP DPF**	Std
	ENGINE EQUIPMENT	
1134100	AIR COMPRESSOR, MERITOR/WABCO 318 18.7 CFM	Std
1270002	INSIDE/OUTSIDE AIR INTAKE W/IN-CAB CONTROL FOR SNOWPLOWS	Opt

Pid Code	Description	
1321111	ALTERNATOR, LEECE NEVILLE 12V 160A BRUSH-TYPE	Opt
3165106	**BATTERIES, (3) MACK 12V 1000/3000 CCA THREADED STUD**	Opt
1210001	BUG SCREEN, RADIATOR MOUNTED	Std
1190004	TO -34 DEGREES F (-37 DEGREES C)	Std
1230011	**MACK COOLANT CONDITIONER**	Std
1100700	**ENGINE BRAKE, MACK POWERLEASH**	Std
1290009	ENGINE BLOCK HEATER, 120V 1500 WATT ENGINE BLOCK HEATER	Opt
1180026	FAN DRIVE, BEHR FAN AND ELECTRONIC MODULATING FAN DRIVE	Std
2930001	**FUEL-WATER SEPARATOR, MACK W/MANUAL DRAIN VALVE (INTEGRAL W/PRIMARY FUEL FILTER)**	Std
1240003	**HOSES - RADIATOR/HEATER, MACK BRAND EPDM RADIATOR & HEATER HOSES**	Std
0971000	OIL PAN, CORROSION RESISTANT OIL PAN	Opt
4310000	OIL PAN HEATER, W/O OIL PAN HEATER	Std
4210000		
1280000	W/O ENGINE COLD START AID	Std
1311215	STARTER, 12 VOLT DELCO MTHD 39	Std
4190000	TETHER DEVICE, W/O TETHER DEVICE	Std
	TRANSMISSION EQUIPMENT/DRIVELINES	
4630000	CLUTCH ASSIST (AIR), Information is not required	Std
3350003	CLUTCH PEDAL, W/O CLUTCH PEDAL	Std
8260000	mDRIVE - PARKER PUMP, W/O PARKER PUMP	Std
M050000	TRANSMISSION SHIFT SETTINGS, W/O TRANSMISSION SHIFT SETTINGS	Opt
M190000	TRANSMISSION PTO1 SPLITTER RANGE, W/O PTO1 FOR SPLITTER RANGE	Opt
M200000	TRANSMISSION PTO2 SPLITTER RANGE, W/O PTO2 SPLITTER RANGE	Opt
1920002	TRANSMISSION BELL HOUSING, ALUMINUM	Std
1380000	W/O TRANSMISSION DUSTPROOFING	Std
1390009	TRANSMISSION OIL COOLER, STAINLESS STEEL COOER LINES	USR
SL40008	SYNTHETIC LUBRICANT - TRANSMISSION, TRANSYND SYNTHETIC LUBE FOR ALLISON TRANS	Opt
779223F	VOCATIONAL PACKAGE - ALLISON, ALLISON GEN 5 PACKAGE #223, ON/OFF HWY, SHIFT TO NEUTRAL W/PARKING BRAKE ENGAGED	Opt
3380000	WITHOUT DRIVESHAFT GUARD FOR CENTER BEARING	Std
1951202	DRIVELINE - MAIN, MERITOR 176 MXL "XTENDED LUBE"	Opt
	CAB (A thru G)	
1731001	**MACK (BERGSTROM) INTEGRAL W/HEATER COMBINATION HEATER/DEFROSTER AND CONDITIONER**	Std
1260000	AIR RESTRICTION MONITOR (INTAKE), AIR RESTRICTION MONITOR (DISPLAYED IN CO-PILOT)	Std
3940011	DASH CONTROL/POWER SUPPLY/LOCAL INSTALLATION PLOW LAMPS W/LEAD FURNISH AT GRILLE W/2W/3W WEATHER PACK CONNECTION	Opt
1443000	CAB CONFIGURATIONS, LH-DRIVE CA68 CONV CAB	Std
C0D0000	WITHOUT CAB CLEANOUT	Std
2070001	CAB MOUNTING, AIR SUSPENSION	Std
9970001	CERTIFIED WEIGHT	Opt
1640011	PROVIDE (6) MISC SWITCHES (2) 15A IGN, (1) 20A IGN, (1) 10A IGN, (1) 15A BAT, AND (1) 20A BAT.	Opt
9050003	PARK BRAKE AND ENGINE RUNNING ACTIVATED	Std
5760005	(4) DOME LAMPS - DOOR AND SWITCH ACTIVATED	Std
2090005	FENDER EXTENSIONS, FENDER EXTENSIONS	Opt
7860105	5LB (ABC RATED) MOUNTED BETWEEN LH SEAT BASE AND DOOR WITH VALVE AIMED REARWARD	Opt
8330042	GAUGE CLUSTER, EXHAUST PYROMETER AND TRANSMISSION OIL TEMPERATURE GAUGES	Std

Pid Code	Description	
1980001	GAUGES, ENGLISH/METRIC DISPLAY	Std
2150000	WITHOUT REAR AXLE OIL TEMPERATURE GAUGE	Std
6390000	W/O INSIDE/OUTSIDE TEMP GAUGE OPTION	Std
4921003	GEAR SHIFT, DASH MOUNTED SHIFTER	Inc
1450001	GLASS - CAB WINDOW, TINTED WINDSHIELD, SIDE AND REAR WINDOWS	Std
5870021	DIAGONAL GRAB HANDLE ON INSIDE DRIVER'S DOOR	Opt
B700002	GRILLE - HOOD AIR INTAKE, BRIGHT FINISH GRILLE	Opt
4000018	GRILLE, BRIGHT FINISH BARS W/BRIGHT FINISH SURROUND GRILL MOUNTED	Opt
	CAB (H thru R)	
8210002	HEADLINER, VINYL COVERED FOAM PADDED HEADLINER	Std
3400013	HOOD AND FENDERS, COMPOSITE MATERIAL - TILTABLE W/INSPECTION HATCH	Inc
2080001	PAINTED HOOD LATCHES	Std
1540001	**HORN - AIR, (1) MACK RECTANGULAR SINGLE TRUMPET**	Std
3610001	HORN - ELECTRIC, DUAL TONE (TWO HORNS)	Opt
3120015	IDENTIFICATION/CLEARANCE LIGHTS, (5) MARKER AND CLEARANCE, INCANDESCENT, SURFACE MOUNTED	Std
C0I0000	IN-DASH STORAGE, W/O UPPER STORAGE OPTION	Std
C0J0012	INSTRUMENT CLUSTER DISPLAY, CO-PILOT DRIVER DISPLAY, ENHANCED 4.5" DIAGONAL LCD DISPLAY W/4-BUTTON STALK CONTROL W/O DIAG DISPLAY	Std
A270003	INSTRUMENT PANEL, WOODGRAIN FINISH	Inc
0042103	INTERIOR TRIM (PEDIGREE - SLATE GRAY) Vinyl headliner, cloth/vinyl seat trim, 2 netted storage compartments and center CB radio mounting provisions in overhead console, rear panel with storage pouch, signature polyurethane floor mat, brushed nickel instrument panel with chrome gauge bezels, diamond pattern fabric on doors, padded interior sun visors both sides, 2 spoke urethane grip brushed nickel spokes, **brushed nickle Mack horn cap, adjustable tilt/telescoping steering column, hand crank lh/rh windows, 2** general overhead lights, 1 driver overhead light & 1 map non-glare overhead light, 2 12V power sources, 2 cup holders, 2 trash bag hooks, 2 coat hangers, rh storage compartment, seat belt retractors, rh door peep window, lighted door mounted map pocket lights.	Opt
1600001	CHASSIS KEYED AT RANDOM - 2 KEYS	Std
1522113	MIRRORS - EXTERIOR, AERODYNAMIC MOTO MIRROR PACKAGE: RH/LH MOTORIZED & HEATED	Opt
1532002	MIRRORS - CONVEX TYPE, BRIGHT FINISH, LH & RH, 8" DIA. CONVEX	Std
4150000	OVERHEAD CONSOLE, (3) COMPARTMENT W/NET	Opt
1746101	AM/FM PREMIUM STEREO, CD-PLAYER, MP3, WEATHERBAND, HANDSFREE INTERFACE, BLUETOOTH	Std
1560004	RADIO ANTENNA, CAB MOUNTED BEHIND LH DOOR	Std
1660001	POWER LEADS (5-WAY BINDING POSTS FOR CB RADIO) MOUNTED ON TOP OF DASH	Inc
2030009	RADIO ANTENNA - CB, 48" ANTENNA LEFT SIDE MIRROR MOUNTED	Opt
4320002	DASHBOARD MOUNTING STRAP	Opt
	CAB (S thru Z)	
1962270	SEAT - DRIVER, BOSTROM TALLADEGA 915 (HI-BACK) AIR SUSPENSION	Opt
1971116	**SEAT - RIDER, MACK FIXED (HI-BACK) W/INTEGRAL STORAGE COMPARTMENT**	Opt
1659000	SEAT ARM RESTS, INBOARD MOUNTED ARM REST, DRIVER'S SEAT ONLY	Inc
4850002	SEAT COVERING, CLOTH W/VINYL TRIM DRIVER AND RIDER	Inc
5920005	SEAT BELTS/RETRACTORS, LAP AND SHOULDER W/CAB MOUNTED SHOULDER BELT W/ADJUSTABLE D-RING FOR DRIVER & RIDER SEATS	Std
3730000	W/O ROOF VENT VENTILATION	Std

Pid Code	Description	
4390001	STEERING COLUMN, ADJUSTABLE TILT TELESCOPE	Std
1610013	STEERING WHEEL, TWO SPOKE URETHANE GRIP BRUSHED NICKEL SPOKES	Inc
D0C0001	STORAGE POUCH REAR	Std
1570001	SUN VISOR, EXTERIOR, FIBERGLASS (CAB COLOR)	Opt
3540002	SUN VISOR - INTERIOR, BOTH SIDES (PADDED VINYL)	Std
2390007	TURN SIGNAL SWITCH, SELF CANCELLING TURN SIGNALS	Std
1460008	WINDOW CONTROLS, POWER WINDOW LIFT WITH ELECTRIC DOOR LOCK, LH & RH	Opt
M060002	WINDSHIELD, 2-PIECE WINDSHIELD	Std
B579001	WINDSHIELD WASHER RESERVOIR, WINDSHIELD WASHER RESERVOIR INSTALLED BOC	Opt
1480011	WINDSHIELD WIPERS, 2 SPEED ELECTRIC MOTOR W/INTERMITTENT FEATURE	Std
	FRAME EQUIPMENT/FUEL TANKS	
2794102	BUMPER - FRONT, EXT.-SWEPT BACK-STEEL CHANNEL 122.5"/3112 mm BBC	Std
2811055	CROSSMEMBERS, BOC AND INTERMEDIATE(S) STEEL HD BACK-TO-BACK CHANNEL	Std
4670007	CROSSMEMBER (BEHIND REAR AXLE), W/O OPTIONAL CROSSMEMBERS BEHIND REAR AXLE/BOGIE	Std
8190000	WITHOUT FIFTH WHEEL MOUNTING ANGLES	Std
2241030	FRONT FRAME EXTENSION, 20" FOR SNOW PLOW MOUNT (CONT' PARENT RAIL) W/TILT W/INSPECTION HATCH TYPE HOOD W/SWEPT-BACK STEEL BUMPER.	Opt
2430009	TOWING DEVICE - FRONT, HOOKS	Std
288A072	FUEL TANK - LH, 72 GALLON (276 L) ALUMINUM 26" DIAMETER	Opt
2900000	FUEL TANK - RH, OMIT RH STANDARD	Std
2210000	FUEL TANKS - BRIGHT FINISH, W/O SPECIAL FINISH FUEL TANK	Std
2230002	STANDARD FINISH STEPS AND STAINLESS STEEL BRIGHT FINISH STRAPS	Opt
DF12133	8.7 GALLON (33 L) DEF TANK	Inc
DF20000	WITHOUT DEF TANK COVER	Inc
5900000	W/O FUEL LINE OPTION	Std
6330003	FURNISH STANDARD FUEL TANK CAP	Std
4910000	W/O ISOLATED TANK(S)	Std
	FRONT AXLE/EQUIPMENT/TIRES	
2401501	**FRONT AXLE, 20000# (9072kg) MACK FXL20 WIDE PIVOT CENTER STRAIGHT SPINDLE/UNITIZED** BEARINGS	Opt
9001359	TIRES BRAND/TYPE - FRONT, BRIDGESTONE - TUBELESS RADIAL PLY, (2) 315/80R22.5 20 L M860A (ALL POS)	Opt
2502000	WHEELS - FRONT, STEEL DISC (10-HOLE)	Opt
5312723	(2) 22.5x9.0 (228 mm) HAYES LEMMERZ 10-HOLE HUB PILOTED (11 1/4"/286mm BC)(FIVE HAND HOLE)(6.42" INSET)	Opt
3760000	WHEELS - POLISHED (FRONT), W/O FRONT DISC WHEEL BRIGHT FINISH	Opt
2411105	BRAKES - FRONT, MERITOR "S" CAM TYPE 16.5" x 6" Q+	Opt
2472200	BRAKE DRUMS - FRONT, CAST OUTBOARD MOUNTED	Inc
6370001	DUST SHIELDS - FRONT BRAKE, FURNISH	Opt
2481000	HUBS - FRONT, FERROUS	Std
2463000	FAG SCHAEFFLER, FRONT GREASE SEAL	Std
3850001	SHOCK ABSORBERS, FRONT	Std
2420002	SLACK ADJUSTERS - FRONT, HALDEX - AUTOMATIC	Std
2442003	**SPRINGS - FRONT, MACK MULTILEAF 20000# (9072kg) GROUND LOAD RATING**	Opt
2260002	SPRING BUILD-UP, RH BUILD-UP FOR WING PLOW APPLICATIONS	Opt
2452214	STEERING, SHEPPARD SD110 + HD94	Opt

Pid Code	Description	
B440001	PROTECTIVE NYLON SPACER BETWEEN DISCS WHEEL TO DRUM	Opt
	REAR AXLE/EQUIPMENT/TIRES/RATIOS	
2522025	REAR AXLE, 30000# (13608kg) MERITOR RS-30-185 SINGLE REDUCTION	Opt
9011180	TIRES BRAND/TYPE - REAR, BRIDGESTONE - TUBELESS RADIAL PLY, (4) 12R24.5 16 H M843 (ALL POSITION)	Opt
2580001	CARRIER/RATIO - REAR AXLE, MALLEABLE HOUSING, 4.89 RATIO	Opt
2570489		
2672000	WHEELS - REAR, STEEL DISC (10 HOLE)	Opt
3462733	(4) 24.5x8.25 (210 mm) HAYES LEMMERZ 10-HOLE HUB PILOTED (11 1/4"/286 mm BC)(TWO HAND HOLE)	Opt
2350000	WHEELS - POLISHED (REAR), W/O REAR DISC WHEEL BRIGHT FINISH	Opt
2531101	BRAKES - REAR, MERITOR-CAM - 16.5"x7" P BRAKES	Opt
2632200	BRAKE DRUMS - REAR, CAST OUTBOARD MOUNTED	Std
6380001	DUST SHIELDS - REAR BRAKE, FURNISH	Opt
2641001	HUBS - REAR, CONMET IRON PRESET REAR HUB W/INTEGRATED SPINDLE NUT	Std
2620002	PREMIUM HUB OIL REAR SEAL	Std
2550002	SLACK ADJUSTERS - REAR, HALDEX - AUTOMATIC	Std
2601035	SUSPENSION - REAR, 30000# MULTILEAF W/HELPER NO ANTI-SWAY	Opt
3230000	SUSPENSION - HEIGHT CONTROL KIT, W/O AIR SUSPENSION HEIGHT CONTROL	Std
M640000	AIR SUSPENSION DUMP WARNING, WITHOUT AIR SUSPENSION DUMP WARNING	Std
3009005	SPRING BRAKE CHAMBERS - VENDOR, MGM MODEL TR-T (TAMPER RESISTANT)	Std
4790005	REAR BRAKE CHAMBERS SIZE 36/36 TYPE	Inc
2540400	LOCKING MAIN DIFFERENTIAL, DRIVER CONTROLLED	Opt
B430001	FURNISH PROTECTIVE NYLON SPACER BETWEEN DISCS & WHEEL TO DRUM	Opt
6870000	STANDARD WHEEL STUD OPTION	Std
	FRAME/WHEELBASE/PLATFORM	
2710187	WHEELBASE, 187" (4749 mm) WB 99" CA (2514 mm)	Opt
2720162	PLATFORM, 162" LP (4114 mm) 62" AF (1580 mm) USED WITH 187" WB	Opt
2741028	FRAME RAILS, 11.811" x 3.54" x .44" (300 x 90 x 11.1mm) STEEL Section Modulus: 23.5 cu in/RBM 2,820,000 in lbs per rail	Opt
2730000	FRAME REINFORCEMENT - INSIDE, W/O 5MM INSIDE CHANNEL REINFORCEMENT	Std
	AIR/BRAKE	
2960003	AIR DRYER, MERITOR/WABCO HEATED AIR DRYER, 1200 W/COALESCING OIL FILTER	Std
1410000	W/O RELOCATED AIR TANKS	Std
2802000	AIR RESERVOIRS, ALUMINUM, STANDARD FINISH	Opt
6980006	ANTI-LOCK BRAKE SYSTEM, BENDIX WITHOUT TRACTION CONTROL	Opt
3520100	AIR CONTROL VALVES - VENDOR, BENDIX SWITCHES AND VALVES WHERE POSSIBLE	Inc
3020002	BRAKE CONTROL VALVE SYSTEM, TWO (2) VALVE DUAL BRAKE SYSTEM - TRAILER SUPPLY AND TRACTOR-TRAILER PARK	Opt
DVA0004	DRAIN VALVES, AUTOMATIC DRAIN VALVE, HEATED ON SUPPLY TANK, MANUAL (PETCOCK) ON ALL OTHER TANKS	Opt
3010003	HAND CONTROL VALVE FOR TRAILER OR REAR SERVICE BRAKES - DUAL FUNCTION	Opt
0080000	W/O TRAILER ACCESS PACKAGE	Std
	TRAILER CONNECTIONS	
5170002	TRAILER AIR CONNECTIONS, TRAILER AIR BRAKE CONNECTIONS, END OF FRAME	Opt
3070000	WITHOUT HOSE TENDER	Std

Pid Code	Description	
3090000	W/O TRAILER AIR HOSES	Std
3190000	W/O TRAILER ELECTRICAL CABLE	Std
3210002	TRAILER ELECTRICAL RECEPTACLE, SINGLE 7 PINS STD SAE TYPE, END OF FRAME	Opt
3080000	OMIT TRAILER CONNECTORS HOLDER	Std
	ELECTRICAL	
3170003	BACK-UP ALARM, ECCO BACK-UP ALARM 575 CONSTANT SOUND LEVEL 107 db	Opt
4050005	BATTERY BOX COVERS, MOLDED PLASTIC	Std
3930013	BATTERY BOX - MOUNTING, (1) BATTERY BOX LEFT HAND RAIL	Inc
3180010	FLAMING RIVER BIG SWITCH WIRED ON POSITIVE SIDE	Opt
B660002	DASH MTD, INDICATOR BODY/HOIST UP "BODYBUILDER LAMP"	Opt
M150002	CHASSIS & POWER HARNESS WITH HEAVY DUTY CASING	Std
B830025	"BODY LINK" III W/CAB PASS-THRU	Std
3130001	DASH CONTROL & WIRING, W/HOLESIZE TO ACCOMMODATE LOCAL INSTALL OF RND/RECT AUX FOG OR DRIVING	Opt
4830000	REAR LIGHTING, FURNISH REAR LIGHTING	Std
	PAINT	
9442003	**PAINT - CAB EXTERIOR, SINGLE COLOR, MACK YELLOW [PPG: P9016]**	
9960001	PAINT - CAB, URETHANE BASE COAT W/O CLEAR COAT	Std
9512006	**PAINT - CHASSIS RUNNING GEAR, MACK BLACK (URETHANE)**	Std
	PAINT - BUMPER, SAME AS CHASSIS RUNNING GEAR	Inc
9520000	PAINT - FRONT SPOKE WHEELS, WITHOUT OPTIONAL SPOKE WHEEL PAINT	Std
9530000	WITHOUT OPTIONAL SPOKE WHEEL PAINT	Std
6520005	PRE-FINISHED POWDER COAT WHITE	Opt
6530005	PRE-FINISHED POWDER COAT WHITE	Opt
	PAINT PROCESS CODES	
9380001	SAME COLOR AS CHASSIS RUNNING GEAR (5ZB-A1X)	Inc
9220000	**CHASSIS RUNNING GEAR - STD COLOR (MACK BLACK) (6AB-Z1X)**	Inc
9390000	W/O PAINT FOR FUEL TANK (7HB-Z1X)	Inc
9860000	W/O CUSTOM PAINT FOR HUB&DRUM/SPOKES (5YB-Z1X)	Inc
9850000	W/O CUSTOM PAINTED FRONT/REAR RIM/WHEEL (6BB-Z1X)	Inc
	PTO/SPECIALTY/ADDITIONAL EQUIPMENT	
1830002	PTO - CRANKSHAFT ADAPTER, 1350 SERIES FLANGE (DOES NOT INCLUDE FRONT FRAME EXTENSION)	Opt
4160000	PTO - REAR ENGINE (REPTO), WITHOUT REAR ENGINE POWER TAKE OFF	Std
1919007	PTO - CONTROL, PTO SWITCH AND LIGHT WITH WIRING AND PIPING FOR LOCAL INSTALLATION	Opt
4420003	TORQUE CONVERTER TC541	Inc
4550000	W/O SPECIAL DECALS	Std
	V-MAC IV PROGRAMMABLE PARAMETERS	
9320065	CUSTOMER VEHICLE LIMITING SPEED (MPH) 65 mph	
CSL0065	PEDAL ROAD SPEED LIMITER (MPH) 65 mph	
A200000	LGVLS FEATURE ACTIVATION Omit	
A210000	LOWER GEAR VEHICLE LIMITING SPEED (MPH) 00 mph	
AJ10000	SOFT RSL Omit	
C550001	PDLO ENGAGED VLS FEATURE Furnish	
C560025	PDLO ENGAGED VEHICLE LIMITING SPEED 25 rpm	
	CRUISE CONTROL SETTINGS W/ALLISON TRANS	Opt

Pld Code	Description	
9330065	CRUISE CONTROL MAX SET SPEED (MPH) 65 mph	
A020020	CRUISE CONTROL MIN SET SPEED (MPH) 20 mph	
A2W0000	CRUISE CONTROL AUTORESUME W/CLUTCH Omit	
AL10003	CRUISE'N BRAKE ENGAGEMENT DELAY (MPH) 3 mph	
4667000	SMOOTH CRUISE Omit	
A902200	ENGINE OVERSPEED COMPANY LIMIT (RPM) 2200 rpm	
A3K2100	FUELED ENGINE OVERSPEED COMPANY LIMIT (RPM) 2100 rpm	
A880075	VEHICLE OVERSPEED COMPANY LIMIT (MPH) 75 mph	
A870070	FUELED VEHICLE OVERSPEED COMPANY LIMIT (MPH) 70 mph	
A1Y0002	IDLE LOGGING DELAY (MIN) 2	
	Monthly Trip Summary	
C0U0000	PERIODIC TRIP HOUR OF DAY 0 (disable)	
C0V0000	PERIODIC TRIP DAY OF WEEK 0 (disable)	
C0W0001	PERIODIC TRIP DAY OF MONTH 1	
	DAYTIME RUNNING LIGHTS W/O OVERRIDE SWITCH	Std
C0Q0000	DRL OVERRIDE SWITCH SPEED THRESHOLD (MPH) 00	
C0R0000	DRL OVERRIDE SWITCH OFF TIME (MIN) 00 mph	
C420001	CO-PILOT FLEET TRIP PROGRAMMING ACCESS Fleet Level	
D0E0000	FLEET MANAGEMENT VIA CO-PILOT Omit	
A942100	EHT MAX ENGINE SET SPEED (RPM)	
	2100 rpm	
A030700	EHT MIN ENGINE SET SPEED (RPM) 700 rpm	
A010010	EHT VEHICLE SPEED RANGE LIMIT (MPH) 10 mph	
A970100	EHT RAMP RATE (RPM/Sec)	
A950000	EHT SINGLE SPEED CONTROL ACTIVATION Omit	
A960000	EHT SINGLE SPEED CONTROL SET SPEED (RPM) 0000 rpm	
AE50000	EHT JUMP-TO-MIN SET SPEED Omit	
A7S0050	EHT HOLD TO NEAREST RPM 50 rpm	
AD70050	EHT ACCEL-DECEL BUMP-UP RPM 50 rpm	
AD80050	EHT ACCEL-DECEL BUMP-DOWN RPM 50 rpm	
A070001	ENGINE PROTECTION - OIL PRESSURE SHUTDOWN Furnish	
A080000	ENGINE PROTECTION - COOLANT LEVEL SHUTDOWN Omit	
A060001	ENGINE PROTECTION - COOLANT TEMP SHUTDOWN Furnish	
C0X0001	ENGINE PROTECTION - ENGINE OIL TEMP SHUTDOWN Furnish	
A2Y0001	ENGINE PROTECTION TRANS OIL TEMP SHUTDOWN Furnish	
A820000	ALLOW FAN OVERRIDE WHEN PARKED Omit	
A3A0000	FAN ACTIVATION WITH PTO Omit	
	FUEL ECONOMY INCENTIVE FOR USE WITH INSTRUMENT CLUSTER DISPLAY (C0J 0002)	Std
AK50000	FEI PENALTY TARGET FUEL ECONOMY No Driver Incentive	
AK70000	FEI PENALTY TARGET FUEL ECONOMY (MPG) 0.0	
AK80000	FEI PENALTY VEHICLE SPEED DECREASE (MPH) 0 mph	
A860000	FEI REWARD TARGET FUEL ECONOMY (MPG) 0.0	
AK60000	FEI REWARD VEHICLE SPEED INCREASE (MPH) 0 mph	
AK90000	FEI DISTANCE CALCULATION INTERVAL (Miles) 00	
	GOVERNOR SETTINGS FOR USE WITH AUTOMATIC TRANSMISSIONS	Inc
A260002	GOVERNOR TYPE Min-Max Governor	

Pid Code	Description
A741950	ENGINE HIGH IDLE SPEED IF STOPPED 1950
M7U0000	VEHICLE ACCELERATION LIMITING FEATURE Disable
A7U0000	REDUCED ENGINE RPM RANGE IN UPPER GEARS FEATURE Disable
AZQ0000	ENGINE RPM LIMIT IN UPPER GEARS 0000
M7X0000	1st TRANS RATIO FOR REDUCED HIGH IDLE 0000
A7Y0000	LAST TRANS RATIO FOR FULL HIGH IDLE 0000
A1I0650	ENGINE LOW IDLE SET SPEED (RPM) 650 rpm
A100000	DRIVER LOW IDLE ADJUST FEATURE ACTIVATION Omit
C0K0000	SMART IDLE FEATURE ACTIVATION Omit
C0T0010	SMART IDLE ELEVATED IDLE RPM TIME (MINS) 10
C540000	IDLE S/D ABS TAMPER CHECK Omit
B690000	IDLE COOLDOWN FEATURE ACTIVATION Omit
9080000	IDLE SHUTDOWN FEATURE ACTIVATION Omit
9340010	IDLE SHUTDOWN TIME (MINS) 10
M020030	IDLE SHUTDOWN WARNING TIME (SECS) 30
A170100	IDLE SHUTDOWN WARM-UP TEMPERATURE (DEG F) 100
A160005	IDLE SHUTDOWN WARM-UP TIMER (MINS) 5
A140000	IDLE S/D OVERRIDE W/EHT Omit
A130002	IDLE S/D OVERRIDE W/PTO Furnish
A230001	IDLE S/D OVERRIDE W/ENGINE LOAD Furnish
A3I0020	IDLE S/D OVERRIDE % ENGINE LOAD THRESHOLD 20
C0Z0000	IDLE S/D CONTROL W/O Idle Shutdown
A3E0060	IDLE S/D OVERRIDE LOWER TEMP. THRESHOLD (DEG F) 60
A3F0080	IDLE S/D OVERRIDE UPPER TEMP. THRESHOLD (DEG F) 80
C0N0001	MAINTENANCE MONITOR FEATURE ACTIVATION Furnish
A412100	PTO 1 MAX ENGINE SET SPEED (RPM) 2100 rpm
A980600	PTO 1 MIN ENGINE SET SPEED (RPM) 600 rpm
A1A0010	PTO 1 VEHICLE SPEED RANGE LIMIT (MPH) 10 mph
A2B0100	PTO 1 RAMP RATE (RPM/Sec) 100
2330000	PTO 1 SINGLE SPEED CONTROL ACTIVATION Omit
A051000	PTO 1 SINGLE SPEED CONTROL SET SPEED (RPM) 1000 rpm
A5K0000	PTO 1 SINGLE SPEED CONTROL AUTOSET Omit
AF60000	PTO 1 JUMP-TO-MIN SET SPEED Omit
M030060	PTO 1 VEHICLE LIMITING SPEED (MPH) 60 mph
AE70050	PTO 1 HOLD TO NEAREST RPM 50 rpm
AF10050	PTO 1 ACCEL-DECEL BUMP-UP RPM 50 rpm
AF30050	PTO 1 ACCEL-DECEL BUMP-DOWN RPM 50 rpm
A622100	PTO 2 MAX ENGINE SET SPEED (RPM) 2100 rpm
A1B0600	PTO 2 MIN ENGINE SET SPEED (RPM) 600 rpm
A1D0010	PTO 2 VEHICLE SPEED RANGE LIMIT (MPH) 10 mph
A1E0100	PTO 2 RAMP RATE (RPM/Sec) 100
A1Z0000	PTO 2 SINGLE SPEED CONTROL ACTIVATION Omit
A611000	PTO 2 SINGLE SPEED CONTROL SET SPEED (RPM) 1000 rpm
A5L0000	PTO 2 SINGLE SPEED CONTROL AUTOSET Omit
AK10000	PTO 2 JUMP-TO-MIN SET SPEED Omit
M040060	PTO 2 VEHICLE LIMITING SPEED (MPH) 60 mph

Pid Code	Description	
A7P0050	PTO 2 HOLD TO NEAREST RPM 50 rpm	
A7I0050	PTO 2 ACCEL-DECEL BUMP-UP RPM	
A5R0050	PTO 2 ACCEL-DECEL BUMP-DOWN RPM 50 rpm	
DTS0001	SPEED SENSOR TAMPER DETECTION SYSTEM ACTIVATION Furnish	
A790050	SPEED SENSOR TAMPER DETECTION TORQUE LIMIT (%) 50	
	DEALER INFORMATION	
WAR0003	ENGINE WARRANTY, 2YR/250,000 MILES ENGINE WARRANTY US10	Std
0220000	PILOT INSPECTION, WITHOUT PILOT INSPECTION	Opt
	STANDARD SHIPPING INSTRUCTIONS	Std
0120000	**MARKETING PROMOTION, NO FMV LEASE, TRADE BACK RESIDUAL OR TRADE IN WITH MACK PARTICIPATION**	Opt
	SOFT PRODUCTS/BULLDOG PROTECTION	
MGD0002	2 YEARS COVERAGE	Std
M680000	NO PARTNERED SERVICES PROVIDED	Std

WARRANTY CERTIFICATE

For detailed **WARRANTY CERTIFICATE** coverage refer to the Trucks Dealer Portal or contact the Warranty Department.

http://www.trucksdealerportal.com/tdp/master/mastr/warranty/mack/Pages/mackwarranty.aspx

Town of Carmel

, NY

December 01, 2015
17A 1.0
AHXX020117A

PERFORMANCE DATA

Engine	MACK MP7-365C
Max HP	365
Max Torque	1460
Transmission	4500-RDS-5
Rear Axle	RS-30-185
Ratio	4.89
Rear Tire Size	12R24.5
Revolutions per mile	458
GVW Rating	48,640#
GCW Rating	65,000#
Road Surface	MACADAM/ASPHALT
Altitude	1000 ft
Frontal Height	13.0 ft
Frontal Width	96.0 in
Required Grade	3%
Measurement	English

UPPER GEAR DATA

Gear	Ratio	% Grade	MPH	RPM
3	1.53	8.3%	21.0	1200
3	1.53	4.4%	34.1	1950
4	1.00	4.9%	32.1	1200
4	1.00	1.9%	52.2	1950
5	0.76	3.2%	42.3	1200
5	0.76	0.4%	68.7	1950
Level Road		0.0	73.8	2094
Cruise Control		0.7%	65.0	1844

Starting Grade @ 1st Gear: 14.6%
@ 2nd Gear: 6.3%

Minimum 1.5% grade recommended in top gear at peak torque RPM.

Calculated @ 4.89 Rear Axle Ratio

Gear #	Transmission Ratios Reverse	Forward	Gear Reduction	% Split	Gradeability Start	RPM After Shift	Operating Range	MPH
1	5.55	4.70	22.98		16.3%			11.1
2		2.21	10.81	112.7	7.0%	917	11.1	23.6
3		1.53	7.48	44.4	4.4%	1350	23.6	34.1
4		1.00	4.89	53.0	1.9%	1275	34.1	52.2
5		0.76	3.72	31.6	0.4%	1482	52.2	68.7
6								
7								
8								
9								
10								
11								
12								
13								
14								
15								
16								
17								
18								

PERFORMANCE DATA IS FOR COMPARATIVE ANALYSIS AND MAY NOT REPRESENT ACTUAL PERFORMANCE.

Prepared For:
Town of Carmel

, NY

Presented By:
Beam Mack Sales & Service

Syracuse, NY 13057
877-696-6225
grega@beammack.com

December 01, 2015
17A 1.0
Ref #: AHXX020117A

GVW RATING - 48,640#

Max Front GAWR	**20,000#**	Max Rear GAWR	**28,640#**
Front Axle	**20,000#**	Rear Axle	**30,000#**
Front Springs	**20,000#**	Rear Suspension	**30,000#**
Front Tires	**20,000#**	Rear Tires	**28,640#**
Front Wheels/Rims	**20,000#**	Rear Wheels/Rims	**31,200#**

Tenco Industries, Inc.

5700 S. Lima Rd.
P.O. Box 635
Lakeville, N.Y. 14480
1-800-808-3626 Toll Free
1-585-346-3040 Phone
1-585-346-2982 Fax

Date:
11/25/2015

All Quotes are Valid for 30 days.

Quote #
25.11.15
112515

Amthor Welding
Onondaga County
Town of Carmel

AWARD #
7823

Qty	Item#3 Option	Description	Size	Unit Price	Total
1	U-COM-BO-10-RD	10' 6.47 YD TUB STYLE DUMP BODY SPREADER COMBONATION	40 x 52		
1		3/16" Hardox 450 205,000 P.S.I., yield strength steel sides & ends			
1		Front left discharge utilizing cross conveyor in lieu of rear discharge			
1		U-COM-BO pre-wet liquid tank * and mounting bracket assembly only			
1		Pre-wetting system for models TCB-9/10/11/12			
1		12" bolt-on apron installed			
1		Coal chute, each installed			
1	TCW-11H-39-N-R	11' CUTTING EDGE HEAVY DUTY 3/16"MOLDBOARD SKIN STEEL WING	32 x 39 1/2		
1	TCP-11-S-42-E2-HA2	11' CUTTING EDGE HEAVY DUTY STEEL REVERSIBLE PLOW	42"		
1		Parking leg, (manual jack) installed			
1		Rubber deflector			
1		Marker rods			
1	H345FD-FW	Same as detailed above but equipped for front post			
1	FFH48-R	48" full hydraulic front post, c/w PFIX fixed hinge			
1	FAH3FD-R	Patrol type hydraulically detachable rear post and 3 point adjustable rear attachment			
1	34A	PUMP & VALVES (GEAR TANDEM)			
8	35	HOSES 1ST SECTION X2			

Tenco Industries, Inc.

5700 S. Lima Rd.
P.O. Box 635
Lakeville, N.Y. 14480
1-800-808-3626 Toll Free
1-585-346-3040 Phone
1-585-346-2982 Fax

Date:
11/25/2015

All Quotes are Valid for 30 days.

Quote #
25.11.15
112515

Amthor Welding.
Onondaga County
Town of Carmel

AWARD #
7823

Qty	Item#3 Option	Description	Size	Unit Price	Total
8	36B	CABS CONTROLS PER SECTION AIR			
1	37	SWINGING PEDESTAL			
1	41B	SANDER CONTROL(Closed Loop)			
1	9	TARP SYSTEM			
1	74	EXTRA WORK LIGHT			
2	43	PLOW LIGHTS			
1	44	STOP TURN TAIL LIGHTS			
1	45	BACKUPS LIGHTS			
1	46	STROBE LIGHTS			
1	53	PINTLE-HOOK 3/4 STEEL			
1	65	FENDERS			
1	1	U-COM-BO			
1	5	AIR TAILGATE			
1	20	REVERSIBLE			
1	29	ALL WINGS SYSTEM			
1		10' Screens			
1					

Tenco Industries, Inc.

5700 S. Lima Rd.
P.O. Box 635
Lakeville, N.Y. 14480
1-800-808-3626 Toll Free
1-585-346-3040 Phone
1-585-346-2982 Fax

Date:
11/25/2015

All Quotes are Valid for 30 days.

Quote #
25.11.15
112515

Amthor Welding
Onondaga County
Town of Carmel

AWARD #
7823

Qty	Item#3 Option	Description	Size	Unit Price	Total
1					

All prices are F.O.B. Lakeville N.Y.
Thank you for your business!

	Subtotal	$160,483.14
30.00%	Discount	$48,144.94
	Total	**$112,338.20**

Truck to be shipped to: Amthor Welding

I _____ representative of the above government agency wish to accept this quote as written. _____
Your Name Signature

TOWN OF CARMEL HIGHWAY DEPARTMENT

Carmel Highway Department
55 McAlpin Avenue
Mahopac, NY 10541

MICHAEL SIMONE
Superintendent of Highways
845.628.7474
FAX 845.628.1471
MSimone@bestweb.net

#8

FROM THE DESK OF: *Michael Simone*

TO: TOWN BOARD/TOWN SUPERVISOR – KENNETH SCHMITT

☑ Work Session 12/9/15

DATE: NOVEMBER 30, 2015

☐ Agenda

RE: TOWN BOARD AGENDA

Please add to the agenda –

Consider Town Infrastructure Resolution per the New York State Association of Town Superintendents of Highways.

On behalf of myself and the other NYS Highway Superintendents, I strongly suggest your support for this, as it could result in a positive impact on our Community's future CHIPS funding.

Local Transportation Funding – Draft Resolution

Whereas, a reliable transportation infrastructure is vital for the safety of New York's travelling public and its economy; and

Whereas, 85 percent of New York's roads and bridges are maintained by local governments; and

Whereas, despite well-timed and targeted preventative maintenance treatments, the age and condition of many of our locally-owned transportation assets means that they are beyond preservation and in need of much more costly rehabilitation and reconstruction; and

Whereas, estimates by the State Comptroller, DOT and independent studies show a large portion of road mileage is deteriorating and many bridges in the state are rated structurally deficient and functionally obsolete; and

Whereas, the State Comptroller estimates that there will be $89 billion in unmet local infrastructure needs over the next 20 years; and

Whereas, the New York State Association of Town Superintendents of Highways commissioned its own fifteen year analysis that indicates an annual funding gap of $1.3 billion for the local system (excluding NYC) alone; and

Whereas, funding for our local system has been far short of what is needed and we've fallen further and further behind in maintaining the vast and aging transportation infrastructure over this long period with severe consequences for conditions ratings; and

Whereas, the New York State Consolidated Local Street and Highway Program (CHIPS) provides essential funding for every municipality in the state and is part of the New York State Department of Transportation (NYSDOT) capital program; and

Whereas, in the early 1990's the Governor and Legislature created the Dedicated Highway and Bridge Trust Fund (DHBTF) to pay for the NYSDOT capital program and the Dedicated Mass Transit Trust Fund (DMTTF) to assist with the Metropolitan Transportation Authority (MTA) and other transit systems' capital programs; and

Whereas, when the DHBTF was created, it was agreed that the NYSDOT and MTA five-year capital programs would be similar in size and would be negotiated concurrently; and

Whereas, through 2005-09, both five-year capital programs were similar in size and adopted within months of each other; and

Whereas, in 2010 the Executive and Legislature broke traditional parity and enacted a five-year capital program for the MTA but not the DOT; NOW THEREFORE BE IT

RESOLVED, that the Town of --- calls upon the Governor and the state Legislature to make additional state funding and resources available at levels that accurately reflect the critical needs of local roads and bridges; and increase CHIPS funding in the 2016-17 state budget; and BE IT FURTHER

RESOLVED, that the Town of --- calls upon the Governor, and members of the state Legislature to fully fund and submit a new NYSDOT five-year transportation capital plan; and BE IT FURTHER

RESOLVED, that the Town of --- calls upon the Governor and members of the state Legislature to recognize the equality of roads, bridges and transit by restoring funding equality between the MTA and NYSDOT five-year programs and by voting on the plans simultaneously.

NYSAOTSOH Membership Call to Action!

As part of our advocacy efforts we are asking for your immediate assistance.

On behalf of the association, please see the attached draft resolution for you to circulate to your Town Board for their approval which supports increased state funding for local transportation and parity between the DOT and MTA five-year capital programs. Requesting that the capital programs be funded equally and simultaneously is extremely important for the non-transit infrastructure of the state. The timing of our request is critical as the MTA Capital Review Board is meeting soon and there is an opportunity for our Legislative Leaders in Albany to voice their concerns with the lack of parity by voting NO.

We would kindly request that you have copies of the approved resolution forwarded to the Governor and Legislative Leaders as well as your local Senator and Assembly member. Additionally, in an effort to track member participation, please forward a copy of your approved town resolution to Association Headquarters at info@nystownhwys.org or NYSAOTSOH, 125 State Street, Albany, NY 12207. Or, if more convenient you can simply send us an email stating your participation.

Please feel free to amend/customize the resolution to meet your needs.

The following are links to the 2014 NYS Comptroller report on Infrastructure Needs as well as the NYSOATOSH Local Needs Assessment:

https://www.osc.state.ny.us/press/releases/dec12/122012a.htm

https://www.nystownhwys.org/wpcontent/uploads/2014/11/2013LocalNeedsAssessmentUpdate.pdf

Also, attached below is a recent OpEd article we along with the County Highway Superintendents Association submitted which provides background on the issue of parity between the DOT and MTA capital programs.

If you have any questions please call 518-426-1023.
***Thank you,* NYSAOTSOH Executive Committee**

FOR IMMEDIATE RELEASE

local roads matter!

NYS County Highway Superintendents Association
136 Everett Road | Albany, NY 12205
518 465.1694 ph | 518.465.1942 fax
info@countyhways.org | www.countyhways.org

NYS Association of Town Superintendents of Highways Inc.
125 State Street | Albany, NY 12207
518 426 1023 ph | 518 426 3838 fax
info@nystownhways.org | www.nystownhways.org

For More Information Contact:

Kevin P. O'Brien, PE
President, NYSCHSA
Phone: 518-465-1694

OR

Jeffrey Griswold
President, NYSAOTSOH
Phone: 518-426-1023

Caution Drivers - Rough Road Ahead

On Saturday, Governor Andrew Cuomo and NYC Mayor Bill de Blasio announced they had reached an agreement to jointly subsidize the Metropolitan Transportation Authority's (MTA) nearly $11 billion funding gap in its over $26 billion 2015-19 five-year capital program. While the state hasn't yet disclosed where it will come up with its commitment of $8.3 billion, we certainly support this very necessary investment in downstate transit. We hope that the Governor will show the same depth of leadership while developing and funding New York's highway and bridge five-year capital program.

In the recent MTA agreement press release, Governor Cuomo said, "The MTA is the lifeblood of New York, helping millions of people travel throughout the city and surrounding suburbs." We agree, nearly half of the commuters in the twelve counties that have MTA service use public transit to travel to work. But it is important to note that almost forty percent still commute by car. In the state's other fifty counties without MTA service, commuters are much more dependent on their cars with over 95 percent using them to get to work.

Parity

In the early 1990's, then-Governor Mario Cuomo and the Legislature created the Dedicated Highway and Bridge Trust Fund (DHBTF) to pay for the New York State Department of Transportation (NYSDOT) capital program and the Dedicated Mass Transit Trust Fund (DMTTF) to assist with the MTA and other transit system capital programs.

At that time, drivers statewide were asked to have a portion of their gas taxes and auto fees directed toward the DMTTF. Today, New York's drivers pay hundreds of millions of dollars annually to mass transit, about 90 percent of which goes to the MTA.

In return for drivers' financial assistance to transit it was originally agreed that the DOT and MTA's five-year capital programs would be similar in size (parity) and would be negotiated simultaneously.

For nearly two decades through 2009, the parity agreement was honored and both five-year capital programs were similar in size as well as adopted within a month of each other.

In 2010, parity between the MTA and DOT was broken. The MTA received a $23.8 billion five-year

capital program from 2010-15. The DOT's five-year program was never fully funded and the agency only received $18.6 billion to maintain its aging and crumbling infrastructure.

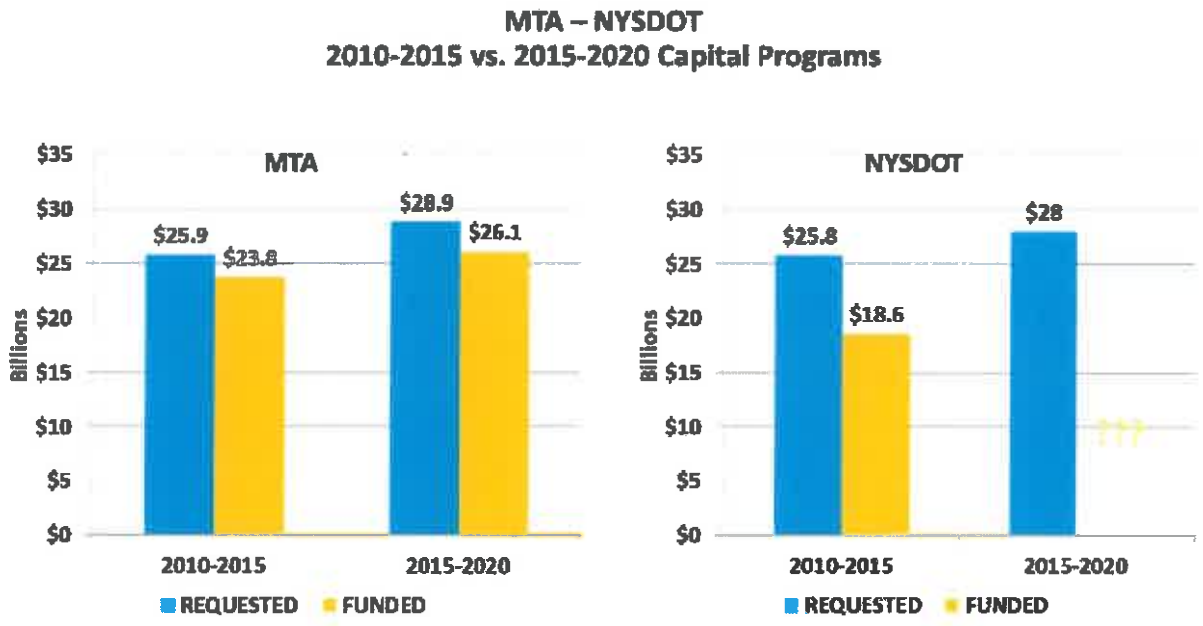

Time to release the NYSDOT 2016-20 Five-Year Capital Program
On April 28,2014, the Governor and legislative leaders signed a memorandum of understanding (MOU) that called for NYSDOT to submit a five-year capital program for the state highway and bridge program and other transportation modes for SFY 2015-16 through SFY 2019-20.

Over a year ago the MTA released a proposed $32 billion five-year capital program followed by public hearings and talks among city and state officials to prioritize the capital needs. This initial proposal and information from the hearings formed the basis of the agreement announced over the weekend by the Governor and Mayor.

Historically the NYSDOT has submitted its five-year capital program needs around the same time as the MTA. In the fall of 2009 NYSDOT revealed its last five-year capital needs request of over $25 billion. Today it is believed that the NYSDOT's needs will top $28 billion. If that number is accurate the NYSDOT will have an estimated $10 billion funding gap, very similar in size to the MTA's funding gap that was just subsidized.

It has been over a year and half since the MOU was signed - it is time for the NYSDOT five-year needs request to be released and a state commitment made to fully fund it!

Use Current Driver Fees/Taxes to Cover NYSDOT's Funding Gap
New York's 11 million drivers pay some of the highest gas/automobile taxes and fees in the United States. The fees and taxes paid by drivers exceed over $6 billion annually yet only about a third of these revenues are dedicated to maintaining our transportation infrastructure.
This leaves nearly $4 billion annually in driver fees and taxes being diverted from their intended use of maintaining New York's roads and bridges.

The Governor and Mayor announced in their MTA agreement that they would no longer allow MTA funds to be redirected to non-mass transit purposes. We urge that similar language be enacted to ensure all driver fees and taxes be used solely for maintaining highway and bridge infrastructure.

2012

Numerous reports by Comptroller Tom DiNapoli, NYSDOT and independent organizations show a large number of the state's road mileage is deteriorating and many bridges in the state are rated structurally deficient and functionally obsolete. Thirty-two percent (32%) of our bridges are deficient and 40% of road pavements are rated fair or poor and getting worse. The Comptroller estimates that there will be $89 billion in unmet infrastructure needs over the next 20 years on just the local system. ***Our state public officials cannot afford to wait any longer to fund our highway and bridge infrastructure.***

The MTA is getting the state financial assistance it says it needs; it's time to restore parity between the MTA and the NYSDOT to begin to address the critical state and local needs of our highways and bridges. An additional $10 billion for NYSDOT over the next 5 years would seem fair.

Jeffrey Griswold
President, NYSAOTSOH

Kevin P. O'Brien, PE
President, NYSCHSA

Mr. Griswold is President of the New York State Association of Town Superintendents of Highways (NYSAOTSOH) and Highway Superintendent for the Town of Preble. Mr. O'Brien is the President of the New York State County Highway Superintendents Association (NYSCHSA) and Commissioner of the Niagara County Department of Public Works. The membership of their collective organizations is responsible for ensuring the safe operation of 87 percent of the state's roads and half of its bridges.

NYSAOTSOH
125 State Street - Albany, NY 12207
Phone: 518.426.1023 - Fax: 518.426.3838
info@nystownhwys.org - www.nystownhwys.org

NYSCHSA
136 Everett Road - Albany, NY 12205
Phone: 518.465.1694 - Fax: 518-465-1942
info@countyhwys.org - www.countyhwys.org

#9

Pasquerello,Anne

From: Mike Simone <msimone@bestweb.net>
Sent: Wednesday, December 02, 2015 8:09 AM
To: Pasquerello,Anne
Cc: msimone@bestweb.net
Subject: Worksession Agenda December 9th
Attachments: doc02048520151202091547.pdf

☑ Work Session 12/9/15

☐ Agenda _____

Anne,

Please place the Highway Department on the Agenda next week to request the purchase "Painting of Reflectorized Pavement Strips" services from Atlantic Pavement Markings, Inc., according to the attached Putnam County Contract Bid #RFP-38-15, contract period: September 1, 2015 – August 31, 2016.

Michael Simone

Superintendent of Highways
Town of Carmel Highway Department
55 McAlpin Avenue
Mahopac, NY 10541

845.628.7474
FAX 845.628.1471

PURCHASING AND CENTRAL SERVICES
Telephone No.: (845) 808-1088 Fax No.: (845) 808-1914

Contract Award Notification

Title:	**Painting of Reflectorized Pavement Stripes on County Highways**
Contract Period:	**SEPTEMBER 1, 2015 – AUGUST 31, 2016**
Bid Opening Date:	**August 12, 2015**
BID No:	**RFB-38-15**
Authorized User:	**County of Putnam Exclusively & Political Subdivisions**
Description:	**Painting of Reflectorized Pavement Stripes on County Highways**
Contractor Information:	**Atlantic Pavement Marking, Inc. 15 Industrial Road Prospect, CT 06712 (203)758-0800**

PURCHASING AGENT: Alex Mezzetta **DATE:** 8/17/15

DEPARTMENT HEAD: Ted Pena **DATE:** 8/28/15
PP

COUNTY EXECUTIVE: MaryEllen O'Neill **DATE:** 9.8.15

COUNTY OF PUTNAM - PURCHASING
40 Gleneida Ave.-1st Floor-Room 105, Carmel, NY 10512
TELEPHONE: 845-808-1088 / TELEFAX: 845-808-1914

TITLE: PAINTING OF STRIPES ON COUNTY ROADS	BID NUMBER: RFB-38-15

PARTICULAR BID SPECIFICATIONS

PAINTING REFLECTORIZED PAVEMENT STRIPES ON COUNTY HIGHWAYS

I. GENERAL:

All final, interim, and temporary markings shall be furnished and applied in locations directed by the Commissioner in accordance with the Manual of Uniform Traffic Control Devices and the Standard Specifications, Construction and Materials prepared by the New York State Department of Transportation Office of Engineering, dated May 1, 2008 with all errata and updates, and in particular, provisions of Section 640, unless modified by these Particular Specifications.

It shall be the responsibility of the Bidder, before submitting a bid, to make himself fully familiar with the work to be done. A contractor will be barred from pleading misunderstanding or deception because of estimates of quantities, character of scope of work, location of other conditions surrounding the same.

Work is to begin as directed by the Commissioner or designated representative.

II. SAFETY & MAINTENANCE OF TRAFFIC:

The contractor shall be responsible for conducting operations with all precautions for the safety of the traveling public and its own employees.

Hard hats and orange colored reflective safety vests shall be worn by all personnel working along County highways.

The striping machine shall carry warning signs, supplied by the Bidder, which are adequate in size and clearly visible. A truck, supplied by the Bidder, with warning signs shall follow the striping machine at an adequate distance in order to prevent traffic from tracking wet pavement markings. The Bidder shall place traffic cones on the wet centerline and remove the cones when the centerline is dry.

Flagmen and signs supplied by the Bidder, in accordance with the aforesaid Manual of Uniform Traffic Control Devices shall be used wherever necessary.

The Bidder shall maintain traffic at all times and with as little interference or inconvenience as possible. No County Highway or portion thereof may be closed to traffic at any time.

The Bidder shall take such other safety measures as may be ordered by the Commissioner of Highways & Facilities or his designated representative.

Any alterations to this document made by the Offeror may be grounds for rejection of the proposal, cancellation of any subsequent award, or any legal remedies available to the County of Putnam.

COUNTY OF PUTNAM - PURCHASING
40 Gleneida Ave.-1st Floor-Room 105, Carmel, NY 10512
TELEPHONE: 845-808-1088 / TELEFAX: 845-808-1914

TITLE: PAINTING OF STRIPES ON COUNTY ROADS	BID NUMBER: RFB-38-15

III. DURATION, AWARD BASIS, QUANTITIES, CONTRACTOR QUALIFICATIONS:

This bid shall be in effect from **September 1, 2014 – August 31, 2015**

The contract will be awarded to the lowest responsible bidder meeting these specifications for each of the pavement striping and pavement marking (stop bars, crosswalks, symbols, etc.) categories.

Actual quantities ordered under this contract will be determined by the Commissioner of Highways & Facilities or his authorized agent.

Only contractors experienced with traffic line painting for NYSDOT or at least five (5) Counties are eligible to bid on this work.

Truck mounted equipment with at least two spray guns shall be used.

IV. WORK PERIODS:

Painting shall be done Mondays through Fridays and not on a holiday or the day before or after a Holiday. The major painting work shall be done approximately between May 15th and October 15th. However, due to the necessities of maintenance and construction of the County highways, smaller quantities may be needed from time to time.

V. ROAD AND WEATHER CONDITIONS:

For water based paint, no painting shall be undertaken when the temperature is below 50 degrees Fahrenheit. No water based painting shall be undertaken when the relative humidity is greater than 85%. No water based painting shall be undertaken during period of rain or if rain is imminent unless specifically approved by the Commissioner of Highways & Facilities. Waterborne traffic paint shall not be applied if rain is expected within 4 hours after application.

The Putnam County Department of Highways & Facilities shall be responsible for cleaning the pavement before striping.

The Bidder shall notify the Commissioner or designated representative at least 48 hours prior to starting operations in order for the County to provide any required road cleaning.

VI. LAYOUT:

The Putnam County Department of Highways & Facilities shall provide all layouts for pavement marking and the required lane width. All edge lines shall be placed as measured from the centerline.

Any alterations to this document made by the Offeror may be grounds for rejection of the proposal, cancellation of any subsequent award, or any legal remedies available to the County of Putnam.

COUNTY OF PUTNAM - PURCHASING
40 Gleneida Ave.-1st Floor-Room 105, Carmel, NY 10512
TELEPHONE: 845-808-1088 / TELEFAX: 845-808-1914

TITLE: PAINTING OF STRIPES ON COUNTY ROADS	BID NUMBER: RFB-38-15

VII. WAGES:

The Bidder agrees to pay a minimum wage which shall be equal to the hourly wage as scheduled by the State of New York Department of Labor, for the various classes of occupations required for the indicated work. Such schedule shall include the prevailing wage rates in effect in the County of Putnam in accordance with the provisions of Section 220-D of the New York State Labor Law.

VIII. MATERIAL DELIVERY & STORAGE:

All paint required shall be delivered to the County Highway Facility at 842 Fair Street in the Town of Patterson. Paint shall be delivered in 55-gallon drums prior to the start of work. The County shall be given 24-hour notice before any delivery of paint or beads.

The County will provide outside storage for paint and will provide a forklift to assist with truck unloading only if prior notice of a delivery is given. Inside storage of reflectorized glass beads will be provided if prior notice is given.

The Contractor will remove all excess materials and empty paint drums within sixty (60) days after the completion of the season's final application. By providing storage, the County is not liable for any damages, theft or any other losses that could be incurred by the Contractor who must maintain insurance on the stored materials and clean up any spills that may occur.

IX. QUALITY CONTROL:

The Bidder should only use striping equipment equipped with "Flow Meters" and "Foot Distance Meters" for calibrating and measuring the work performed.

The Bidder will take all necessary and reasonable precautions to insure that motorists using the highways being striped do not get paint on their vehicles. In such event, the bidder will directly respond to and rectify all verifiable incidents of paint damage on such vehicles.

X. QUALITY ASSURANCE:

The Bidder shall be responsible for all complaints from the public arising out of the striping of the County highways. The Bidder must have a "Field Complaint Procedure" in place. **A copy of the "Field Complaint Procedure" should be submitted with the bid.**

XI. INSPECTION:

The Bidder shall advise the Commissioner of Highways & Facilities at least 24 hours before any application is to be done or before resuming work after a delay or postponement. The

Any alterations to this document made by the Offeror may be grounds for rejection of the proposal, cancellation of any subsequent award, or any legal remedies available to the County of Putnam.

Commissioner, or his authorized representative, will inspect the applications of paint on the County Highways & Facilities.

The Commissioner or his authorized representative shall have the authority to stop work, at any time when, in his opinion, the material, workmanship, operation or end product is unsatisfactory or does not comply with N.Y.S.D.O.T. Standard Specifications Section 640-3 as amended or any safety requirement. In case of a Stop Work Order, work shall not be resumed until authorized by the Commissioner or his authorized representative.

Should workmanship not meet the specifications, the Commissioner of Highways & Facilities may, at his own discretion, terminate the contract.

The Commissioner or his designated inspector shall have the right to enter the Contractor's equipment and to read painting unit flow and mileage gauges at any time during work within the County.

XII. RECORDS AND PAYMENT:

The Commissioner or his designated inspector, shall be given a daily report prepared by the Contractor that summarizes the day's work. For each road painted, said report shall show: beginning and ending point, length in miles, lineal feet of painted line applied, gallons of paint and pounds of beads used. The striping machine operator shall verify all daily reports with the County and shall sign said reports.

The required paint wet film thickness application rate for this contract is 20 mils (approximately 20 gallons per 4 inch wide line per mile).

The report shall compare the actual quantities of materials used with the theoretical quantities required by the specified application rates. The County reserves the right to withhold payment from the Contractor for any day's work for which a daily report is not provided.

No payment will be made during the course of each mobilization. Payment will be made for all work after completion of that work, provided such work is satisfactory to the County Engineer. Prior to any payments being made, the Contractor shall submit certification that all labor and material have been paid in full. Copies of certified payrolls are required with each invoice.

XIII. STOP LINES, HATCH LINES, CROSSWALKS AND CROSSBARS (Items No. P640.24 and P640.25):

All provisions of Section 640 shall apply to these items of work, except that Items 640.20 and 640.21 shall be used to pay for only centerlines, lane lines, and edge lines (measured in miles to the closest hundredth, not feet).

COUNTY OF PUTNAM - PURCHASING
40 Gleneida Ave.-1st Floor-Room 105, Carmel, NY 10512
TELEPHONE: 845-808-1088 / TELEFAX: 845-808-1914

TITLE: PAINTING OF STRIPES ON COUNTY ROADS	BID NUMBER: RFB-38-15

Stop lines, hatch lines, crosswalk markings and crossbars shall be paid for under Item Nos. P640.24 and P640.25, and shall be measured to the nearest tenth of a square foot of area painted, by calculating the product of the length and width of the markings applied.

XIV. MOBILIZATION (Item No. P699):

The Contractor shall provide a lump sum price for each mobilization requested by the County.

A mobilization shall be defined as the Contractor responding to a single request by the County to paint traffic lines in Putnam County, regardless of quantity. Once all work requested by the County under the mobilization is completed and the Contractor has left the County, that mobilization will be considered completed. Subsequent requests for work by the County will be subject to a new mobilization fee. (The County may add work during the on-going mobilization before the Contractor has left the County without being subject to new mobilization charges.)

The price bid for mobilization shall cover all of the Contractor's costs for supplying labor, equipment and materials to complete the work requested by the County associated with a single request. The Contractor shall begin work for a particular mobilization within five (5) workdays of written notice to proceed. Once mobilized, the Contractor shall work exclusively and continuously on the work requested by the County until completed.

Any alterations to this document made by the Offeror may be grounds for rejection of the proposal, cancellation of any subsequent award, or any legal remedies available to the County of Putnam.

RFB-38-15

PAINTING OF REFLECTORIZED PAVEMENT STRIPES ON COUNTY HIGHWAYS

BID RESULTS
1

			SAFETY MARKING, INC. 480 BOSTWICK AVENUE BRIDGEPORT, CT 06605			ATLANTIC PAVEMENT MARKING, INC 15 INDUSTRIAL RD PROSPECT, CT 06712			SENECA PAVEMENT MARKING INC. 3526 WATKINS ROAD HORSEHEADS, NY 14845		
ITEM NO.	DESCRIPTION	PAY UNIT	EST. QUANTITY	UNIT BID PRICE	SUBTOTAL	EST. QUANTITY	UNIT BID PRICE	SUBTOTAL	EST. QUANTITY	UNIT BID PRICE	SUBTOTAL
640.2	WHITE PAINT RELECTORIZED PAVEMENT STRIPES --20 MILS	Mile	250	$215.00	$53,750.00	250	$208.00	$52,000.00	250	$275.00	$68,750.00
640.21	YELLOW PAINT REFLECTORIZED PAVEMENT STRIPES --20 MILS	Mile	250	$219.00	$54,750.00	250	$172.50	$43,125.00	250	$275.00	$68,750.00
P699	MOBILIZATION	Each	3	$1.00	$3.00	3	$0.00	$0.00	3	$1,000.00	$3,000.00
TOTAL BID PRICE ALL ITEMS					$108,503.00			$95,125.00			$140,500.00
ITEM NO.	DESCRIPTION	PAY UNIT	EST. QUANTITY	UNIT BID PRICE	SUBTOTAL	EST. QUANTITY	UNIT BID PRICE	SUBTOTAL	EST. QUANTITY	UNIT BID PRICE	SUBTOTAL
640.22	WHITE PAINT REFLECTORIZED PAVEMENT LETTTERS --20 MILS	Each	20	$29.00	$580.00	20	$25.00	$500.00	20	$65.00	$1,300.00
640.23	WHITE PAINT REFLECTORIZED PAVEMENT SYMBOLS --20 MILS	Each	10	$39.00	$390.00	10	$55.00	$550.00	10	$75.00	$750.00
P640.24	WHITE PAINT REFLECTORIZED STOP LINES, HATCH LINES, CROSSWALKS AND CROSSBARS--20 MILS	S.F.	500	$0.95	$475.00	500	$0.80	$400.00	500	$2.75	$1,375.00
P640.25	YELLOW PAINT REFLECTORIZED HATCH LINES --20 MILS	S.F.	500	$0.95	$475.00	500	$0.75	$375.00	500	$2.75	$1,375.00
P699	MOBILIZATION	EACH	3	$1.00	$3.00	3	$0.00	$0.00	3	$1,000.00	$3,000.00
TOTAL BID PRICE FOR ALL ITEMS					$1,923.00			$1,825.00			$7,800.00
GRAND TOTAL ALL ITEMS					$110,426.00			$96,950.00			$148,300.00

BID TERM
LOW BIDDER

September 1, 2015 - August 31, 2016

Legal Counsel
cc: Supervisor
Police Dept

RECEIVED
TOWN OF CARMEL
NOV 24 2015
TOWN CLERK
Ann Spofford

LAW OFFICE OF
BRUNO V. GIOFFRE, JR., PLLC
2 WESTCHESTER PARK DRIVE, SUITE 205
WHITE PLAINS, NEW YORK 10604

BRUNO V. GIOFFRE, JR.
ADMITTED IN NY, CT & FL

(914) 481-8900
FAX (914) 481-8905

bruno@bgioffrelaw.com
www.bgioffrelaw.com

32 FIELDPOINT ROAD
GREENWICH, CT 06830

#10

November 23, 2015

☑ Work Session 12/9/15

☐ Agenda

Via Overnight Mail
Town Clerk
Town of Carmel
60 McAlpin Avenue
Carmel, New York 10541

Re: 2nd Notice to Municipality of Restaurant/Wine Application for Antonino C Food Service Inc. dba Ristorante Spadafora

Dear Village Clerk:

On behalf of our client, Antonino C Food Service Inc. dba Ristorante Spadafora, we hereby re-notify you pursuant to Alcohol Beverage Control Law, Sections 64, Subdivision 2a and 99D, that our client intends to file an application for a Restaurant/Wine License at 18 Clark Place, Mahopac, New York 10541. Enclosed herewith is the SLA Standardized Notice Form for your review.

In addition, we respectfully request that the Town of Carmel, waive the statutory thirty (30) day waiting period to allow our client to file its application for a Restaurant/Wine License as soon as possible as this restaurant has been open for several months without the ability to serve beer and wine. Please advise the undersigned of the Town of Carmel's position at your earliest convenience.

Thank you for your consideration. Should you have any questions, please do not hesitate to call.

Very truly yours,

Law Office of Bruno V. Gioffre, Jr., PLLC

Bruno V. Gioffre, Jr.

Bruno V. Gioffre, Jr., Esq.

RECEIVED
NOV 24 2015
SUPERVISOR'S OFFICE
TOWN OF CARMEL

Legal Counsel
cc: Supervisor
Police Dept

rev 10/23/13

OFFICE USE ONLY
○ Original ○ Amended Date

State of New York
Executive Department
Division of Alcoholic Beverage Control
State Liquor Authority

Standardized NOTICE FORM for Providing 30-Day Advanced Notice to a Local Municipality or Community Board
(Page 1 of 2 of Form)

RECEIVED
TOWN OF CARMEL
NOV 24 2015
TOWN CLERK

1. Date Notice was Sent: (mm/dd/yyyy) November 23, 2014

2. Select the type of Application that will be filed with the Authority for an On-Premises Alcoholic Beverage License

☒ New Application ☐ Renewal ☐ Alteration ☐ Corporate Change

This 30-Day Advance Notice is Being Provided to the Clerk of the following Local Municipality or Community Board

3. Name of Municipality or Community Board: Carmel Town Clerk

Applicant/Licensee Information

4. License Serial Number, if not New Application: New Application Expiration Date, if not New Application: New Application

5. Applicant or Licensee Name: Antonino C Food Service Inc.

6. Trade Name (if any): Ristorante Spadafora

7. Street Address of Establishment: 18 Clark Place

8. City, Town or Village: Mahopac ,NY Zip Code : 10541

9. Business Telephone Number of Applicant/Licensee: 845-621-0137

10. Business Fax Number of Applicant/Licensee: N/A

11. Buisness E-mail of Applicant/Licensee: N/A

For New applicants, provide description below using all information known to date.
For Alteration applicants, attach complete description and diagram of proposed alteration(s).
For Current Licensees, set forth approved Method of Operation only.
Do Not Use This Form to Change Your Method of Operation.

12. Type(s) of Alcohol sold or to be sold: ("X" One) ☐ Beer Only ☒ Wine & Beer Only ☐ Liquor, Wine & Beer

13. Extent of Food Service: ("X" One) ☒ Restaurant (Sale of food primarily; Full food menu; Kitchen run by chef) ☐ Tavern/Cocktail Lounge/Adult Venue/Bar (Alcohol sales primarily; Meets legal minimum food availability requirements)

14. Type of Establishment: ("X" all that apply)
☒ Recorded Music ☐ Live Music ☐ Disc Jockey ☐ Juke Box ☐ Karaoke Bar ☐ Stage Shows
☐ Patron Dancing (small scale) ☐ Cabaret, Night Club (Large Scale Dance Club) ☐ Catering Facility
☐ Capacity of 600 or more patrons ☐ Topless Entertainment ☒ Restaurant ☐ Hotel
☐ Recreational Facility (Sports Facility/Vessel) ☐ Club (e.g. Golf Club/Fraternal Org.) ☐ Bed & Breakfast
☐ Seasonal Establishment

15. Licensed Outdoor Area: ("X" all that apply)
☐ None ☒ Patio or Deck ☐ Rooftop ☐ Garden/Grounds ☐ Freestanding Covered Structure
☐ Sidewalk Cafe ☐ Other (specify):

rev 10/23/13

OFFICE USE ONLY
◯ Original ◯ Amended Date _____

State of New York
Executive Department
Division of Alcoholic Beverage Control
State Liquor Authority

Standardized NOTICE FORM for Providing 30-Day Advanced Notice to a Local Municipality or Community Board
(Page 2 of 2 of Form)

16. List the floor(s) of the building that the establishment is located on: 1st

17. List the room number(s) the establishment is located in within the building, if appropriate: N/A

18. Is the premises located with 500 feet of three or more on-premises liquor establishments? ☐ Yes ☒ No

19. Will the license holder or a manger be physically present within the establishment during all hours of operation? ☒ Yes ☐ No

20. Does the applicant or licensee own the building in which the establishment is located? ("X" One) ☐ Yes (If Yes SKIP 21-24) ☒ No

Owner of the Building in Which the Licensed Establishment is Located

21. Building Owner's Full Name: BMSSR Holdings LLC

22. Building Owner's Street Address: 47 Mamaroneck Avenue, Suite 104

23. City, Town or Village: Mamaroneck State: New York Zip Code: 10601

Attorney Representing the Applicant in Connection with the Applicant's License Application Noted as Above for the Establishment Identified in this Notice

25. Attorney's Full Name: Bruno V. Gioffre, Jr., Esq.

26. Attorney's Street Address: 2 Westchester Park Drive, Suite 205

27. City, Town or Village: White Plains State: New York Zip Code: 10604

28. Business Telephone Number of Attorney: 914-481-8900

29. Business Email Address of Attorney: bruno@bgioffrelaw.com

I am the applicant or hold the license or am a principal of the legal entity that holds or is applying for the license. Representations in this form are in conformity with representations made in submitted documents relied upon by the Authority when granting the license. I understand that representations made in this form will also be relied upon, and that false representations may result in disapproval of the application or revocation of the license.

By my signature, I affirm - under **Penalty of Perjury** - that the representations made in this form are true.

30. Printed Name: Antonino Cannavo Title President

Signature: X Antonino S. Cannavo

#11

☑ Work Session 12/9/15

☐ Agenda

From: Franzetti,Richard
To: Franzetti,Richard
Cc: Harmon, Joseph
Bcc: "tony"; "frasierfence@live.com"; "gary@garonfence.com"; "info@salemfence.com"
Subject: 10-09-15 Request for Proposal - Garbage Enclosure at Town of Carmel Town Hall
Date: Friday, October 09, 2015 9:43:36 AM

Good morning,

The Town of Carmel (Town) is looking to obtain proposals to install screening for the dumpsters located at Town Hall. Town Hall is located at 60 McAlpin Avenue in Mahopac, NY 10541.

Please note the following:

- All prospective proposers should arrange for a site visit at Town Hall prior to submitting a proposal;
- Per §96-3 of the Town of Carmel Town Code, the dumpster must be screened with a minimum six-foot fence, slatted or solid, either black, brown or hunter green;
- Dumpster enclosure shall be not more than four feet larger than the dumpster to be enclosed within;
- No signage is permitted on the enclosure;
- Upon completion all debris will be cleaned up and taken away;
- All proposers should be licensed in Putnam County; and
- All proposals should be presented using prevailing wage and be able to provide certified payrolls.

All proposals are due back by Wednesday October 28, 2015 by 2 PM.

Thanks. Call with any questions.

Richard J. Franzetti. P.E, BCEE, LEED AP
Town Engineer
60 McAlpin Avenue
Mahopac, New York 10541
Phone - (845) 628-1500 ext 181
Fax – (845) 628-7085
Cell – (914) 843-4704
rjf@ci.carmel.ny.us

This communication may be confidential and is intended for the sole use of the addressee(s). No use or reproduction of the information provided is permitted without the written consent of the Town of Carmel. If you are not the intended recipient, you should not copy, disclose or take any action in reliance on this communication. If you have received this communication in error, please notify the sender by reply e-mail and delete the message and any attached documents.

campanellafence.com

phone 845-628-2200 or 914-628-2200 fax 845-628-5649

campanellafence@gmail.com

289 Route 6 Mahopac, NY 10541

Over 25 Years in Business

Licensed and Insured - Westchester 4145-H91 Yonkers 4418 Putnam 135 Connecticut 581036 Rockland H-11709-12-00-00

Date: 10-16-15		Salesman:	Tony
Customer:	Town of Carmel	E-Mail:	
Contact:	Richard J Franzetti	Phone:	845-628-1500 x181
Job site:	60 McAplin Avenue	Phone:	914-843-4804
		Other:	
Town:	Mahopac New York	Fax:	
Zip:	10541	Other E-Mail:	

By signing below you agree to a Surcharge of 3% added to Total Contract price if paying with a Credit or Debit Card

Description of Installation:

Supply and Install approximately 22 Lf. of chain link fence. (ALL BROWN)
Fence to be 6 ft. high (gates at ground level) approx. 2.5 ft. high (on existing wall)
Includes 1 set of double gates -1 5/8 inch. frame welded construction. Industrial locking device.
Gates to be mounted on 3 inch. poles ss40 wt.
Top rail to be 1 5/8 inch
Wire to be 2 x 9gauge brown vinyl coated and include brown standard privacy slats.

NOTES:
Gate swing to be opposing /one in and one out /drop rod receivers for both positions.
DIG to be notified
Prevailing wage rate with certified payroll.

All Campanella Fences include for installation - cement footings, rock drilling. 4 year guarantee on Labor (unless other wise noted) ***Manufacturer warranties do not include Labor***

NOTE:

CONTRACT CONDITIONS

Purchaser agrees to designate and mark the new fence construction line by stakes or other clearly visible means. prior to Contractor's performance. Purchaser warrants that designated fence construction lines are entirely within Purchaser's property boundaries. Purchaser guarantees that there are no obstructions which could in any way interfere with the Contractor's performance under this Contract and Purchaser warrants that Purchaser has removed any such obstruction prior to the designation of the location of the fence line, including but not limited to the removal of any underground wires, improvements, pipes, sewer conduits, utilities or restrictions of any nature. Purchaser shall obtain any necessary municipal permits and approvals. Purchaser warrants that the work will not violate any town, county or state municipal codes, any pool codes or any wetlands and/or buffer zone ordinances. Purchaser is responsible to disclose to Contractor any wetlands, buffer zones or environmental areas located within 500 feet of the proposed work area prior to the commencement of constructions. Purchaser agrees to indemnify and hold Campanella Fence Centers its agents, servants and employees harmless for any damage caused by a breach any of the foregoing warranties. Purchaser understand that the erection of a fence on Purchaser's property will require the Contractor to remove sod, soil, grass, shrubbery and/or plantings can be affected by the erection of the fencing. Accordingly, Purchaser agrees that Campanella Fence Centers its agents, servants and employees are not responsible for any damage caused to Purchaser's sod, soil, grass, shrubbery and/or plantings or for consequential damage as a result of the erection of the fence, absent gross negligence The price quoted by Contractor in the estimate is based upon normal construction conditions. All grading and or filling required for the projects the sole responsibility of the Purchaser, unless otherwise stated in writing. In the event of legal proceedings brought by Campanella Fence Centers to enforce the terms of this Agreement, the Purchaser shall be required to pay contractor's reasonable legal fees and expenses and Court costs. Dog kennels and animal enclosures are not covered under installation guarantees or warranties. Unless other wise stated Pictures of completed jobs will be posted on Campanella Fence Centers advertising.

Note: This proposal may be withdrawn by us if not accepted within 10 days.

Acceptance of Proposal - The above prices, specifications and conditions are satisfactory and are hereby accepted. You are authorized to do the work as specified. Payment will be made as outlined above. I have also read Contract Conditions, upon signing of the proposal, the said becomes a binding contract.

Payment Policy - 50% Deposit on signing Contract, Balance C.O.D. upon completion. Finance charge after 30 days charge annual rate 24% (2% per month). $35.00 service charge and additional bank fees for all returned checks. 3% surcharge on total contract price if paying by credit or debit card

The above proposal, when accepted by Campanella Fence Centers at this main office, becomes a Contract between the two parties. It is expressly understood that the price quoted by Contractor is for immediate acceptance. Campanella Fence Centers shall not be liable for any delays in performance based upon strikes, accidents, fire, explosions, acts of God, delays in transportation or any other causes beyond the control of Campanella Fence Centers. The proposed fence does not become the property of the Buyer until final payment is made to Campanella Fence Centers Campanella Fence Centers can remove at any time all materials installed by Campanella Fence Centers if final payment is not made pursuant to the terms of this Agreement. Purchaser understands that wood may crack, split, warp, mildew, twist or stain and Campanella Fence Centers provides no warranty with respect to any wood products. ACCEPTANCE OF PROPOSAL - The above specifications and conditions are satisfactory and are hereby accepted You are authorized to do the work as specified. Payment will be made as outlined above. Upon signing of this proposal, the said becomes a binding contract.

Date of Acceptance: _____

Customer Signature: _____

Authorized Signature (CFC): _____

Subtotal		$3,145.00
Tax- Repair	*No Tax Capital Improvement*	exempt
Total		$3,145.00
Deposit Received		$0.00

Billing Address:

Proposal

Date	11/6/2015
Proposal #	13479
PO #	

Garon Fence Company Inc. dba
The Iron Works
323 Railroad Avenue
Bedford Hills, NY. 10507

Phone: 914-666-5596 **Fax: 914-666-6604**

Established 1979

Customer	Job Location	Tel:	
Town Of Carmel 60 McAlpin Avenue Mahopac, NY. 10541 Attn: Mr. Jim Gilcrest	Dumpster Enclosure	Fax:	

Description	Total Contract
Dumpster Enclosure:	
1-Supply and install 6'-6" high x 14' wide double gate with privacy slats.	4,340.00
Frame 2", gate posts 4".	
2- Supply and install 11 linear ft. of 36" high chain link fencing with privacy slats.	1,115.00
Sales Tax	0.00
PAYMENT AS FOLLOWS: ONE-HALF DEPOSIT WITH BALANCE UPON COMPLETION. NON NEW YORK RESIDENTS MUST ADD SALES TAX.	$5,455.00

We hereby propose to furnish material and labor in accordance with above specifications and price. Above proposal valid for 90 days from date of issue. Owner shall pay the remaining balance in full upon completion of job or a 2% per month (24% per annum) finance charge will be applied to any outstanding balances, in addition to any and all legal and/or collection costs. All material is guaranteed to be as specified. All work to be completed in a workmanlike manner according to standard practices. Any manufacturers' warranties shall pass directly to the customer. All painted or stained materials are subject to variations in color and/or texture due to environmental, material and chemical changes. All deposits are covered by a bond to guarantee completion of work. All agreements contingent upon strikes, accidents or delays beyond our control. Owner to carry fire, tornado and necessary insurance. Not responsible for underground pipes, wires, property lines, wiring, etc. Owner is to physically mark these locations. Owner is responsible for all necessary permits required by law to fulfill gate / fence project. Customer may cancel contract at any time in writing prior to midnight of the third business day after contract has been signed. Cancellations after the fourth (4th) business day are subject to a minimum of a 20% cancellation charge, plus cost of any materials already ordered and/or fabricated. Any changes in contract must be approved by both parties. Any alterations or deviations from above specifications involving extra costs will be executed only upon written orders and will become an extra cost over and above the estimate. The risk of loss due to theft, damage or destruction of materials shall pass to the Customer upon delivery to the job site.

Work to begin on or about _____/_____/2015 and be completed on or about _____/_____/2015

For Customer Approval: X_____ Date: _____

For Garon Fence Approval: X_____ Date: _____

Westchester County Lic # WC 06653-H95 Putnam County Lic # PC3795 Connecticut Lic # HIC.0604867

Richard J.Franzetti, P.E.
Town Engineer

(845) 628-1500
(845) 628-2087
Fax (845) 628-7085

Office of the Town Engineer
60 McAlpin Avenue
Mahopac, New York 10541

#12

MEMORANDUM

To: Carmel Town Board

From: Richard J. Franzetti P.E. Town Engineer (RJF)

☑ Work Session 11/9/15

☐ Agenda

Date: December 2, 2015

Re: R 2015-005 Lake Casse Maintenance

Proposals were solicited from contractors for the referenced maintenance contract. The following Bids were received:

	TERENCE KELLY	JAMES CROUGHAN	ROBERT CAREY
2016	13,000	14,000	15,000
2017	13,000	14,000	15,500
2018 (solely at option of TOC)	13,000	14,750	16,000
2019 (solely at option of TOC)	13,000	14,750	16,000
Total	52,000	57,500	62,500
Charge per Clubhouse Events over 20 per year	{$75}	{$125}	{$200}

Copies of the bids and the bid summary are provided as an attachment.

Based on the proposals received Terence Kelly is the low bidder. This Department contacted the references provided. The results are attached. In addition, the Lake Casse Park Advisory Board has provided the attached referral letter in support of Mr. Kelly.

Based upon the above information, we recommend that the contract be awarded to Terence Kelly for 2016 and 2017. We have checked with the Comptroller's Office and have been advised that there is sufficient money in the budget for this contract.

This matter should be placed on the next available work session for discussion.

PROPOSAL TABULATION SHEET FOR:
LAKE CASSE PARK MAINTENANCE
RFP #R2015-005

TOWN OF CARMEL

LOCATION:
THE TOWN OF CARMEL

OPENING DATE: 12/01/15
OPENING TIME: 2:00 PM

	TERENCE KELLY	JAMES CROUGHAN	ROBERT CAREY
2016	13,000	14,000	15,000
2017	13,000	14,000	15,500
2018 (soley at option of TOC)	13,000	14,750	16,000
2019 (solely at option of TOC)	13,000	14,750	16,000
Total	52,000	57,500	62,500
Charge per Clubhouse Events over 20 per yr	{$75}	{$125}	{$200}

PROPOSAL SUBMISSION SHEET
R 2015-005
LAKE CASSE PARK DISTRICT
MAINTENANCE CONTRACT

A. Amount Bid Lump Sum for each year

2016 $ 13,000.00

Thirteen thousand dollars
(Total Amount of Bid in Words)

2017 $ 13,000 00

Thirteen thousand dollars
(Total Amount of Bid in Words)

2018 $ 13,000 00 (SOLELY AT THE OPTION OF THE TOWN)

Thirteen thousand dollars
(Total Amount of Bid in Words)

2019 $ 13,000 00 (SOLELY AT THE OPTION OF THE TOWN)

Thirteen thousand dollars
(Total Amount of Bid in Words)

B. Charge per clubhouse event over 20 per year

2016 $ 75.00

Seventy five dollars and 00/100
(Total Amount of Bid in Words)

2017 $ 75.00

Seventy five dollars and 00/100
(Total Amount of Bid in Words)

2018 $ 75.00 (SOLELY AT THE OPTION OF THE TOWN)

Seventy five and XX/100 dollars
(Total Amount of Bid in Words)

2019 $ 75.00 (SOLELY AT THE OPTION OF THE TOWN)

Seventy five and XX/100 dollars
(Total Amount of Bid in Words)

Terence Kelly	Lake Casse	11/30/15
Submitted by (signature)	**Title**	**Date**

Bidder's Printed Name & Legal Address:
Terence Kelly
192 Shear Hill rd
Mahopac NY 10541

By my signature above, I do hereby certify that I am a full time resident at the above address in the Town of Carmel.

Terence J. Kelly IV

192 Shear Hill Road, Mahopac, NY 10541
(845) 803-8780 Home ♦ (845)721-4775 Cellular ♦
TJK4TH@aol.com

EDUCATION AND COMPUTER SKILLS

Brewster High School, Brewster, NY – graduated 2002
Northern Westchester/Putnam BOCES – Urban Forestry – graduated 2002

WORK HISTORY

New York Thruway Authority – Division Highway – February 2013 – Present – Supervisor

- Oversee employees
- Does scheduling of employees daily and for overtime
- Oversees the maintenance of thruway property including landscaping, snow removal, signage, vehicles and necessary equipment
- Assists in training new employees
- Ensures that employees are following safety procedures and thruway policies
- Ensures that jobs are completed in appropriate amount of time
- Works with other divisions and supervisors to ensure areas are covered
- Supervisor of the month May 2014

New York State Thruway Authority – Cross Westchester Maintenance – April 2003 – February 2013
Thruway Maintenance Worker (Trainee 1, 2, 3 and Journey)

- Serve as Safety Officer for section 2006 to present
- Employee of the Month: January 2007
- Attended and was certified as Trainer and assists in training personnel in daily operations such as use of equipment, procedures, etc. and how to be safe and productive
- Serve as crew leader in various situations
- Perform out of title duties CEOH grade 11 and grade 15 Supervisor
- Serve as a crew member performing journey level tasks of highway and bridge maintenance
- Operate front end loader, skid steer with snow blower, 5 and 7 ton plow trucks for snow and ice operations
- Execute set ups for all snow and ice equipment such as calibrations, lubrications, repairs, etc. for snow and ice operations
- Operate and perform maintenance and repairs on all types of maintenance equipment
- Member of the New York Division Equipment team since 2010
- Operate such equipment as front end loaders, skid steers, rollers, post pounder, backhoe, pick up sweeper, bucket truck, and other various equipment
- Report necessary repairs to supervisor so that equipment can be taken out of service and sent to the repair shop
- Assist in traffic control at accident scenes as well as work zones

Section Maintenance Supervisor I – East Fishkill Maintenance - November 2009 – April 2010

- Acted as temporary Supervisor I at East Fishkill Maintenance
- Planned jobs and supervised crews
- Handled snow and ice control in addition to maintenance and all winter related activities
- Counseled employees in regards to possible disciplinary actions
- Maintained records and paperwork such as daily work plans, MMS, snow and ice reports

- Worked shift during winter staffing and at such time assumed total responsibility for the day to day operations of the entire East Fishkill Section

LICENSES

NYS COMMERCIAL DRIVER LICENSE – CLASS BM
ENDORSEMENTS: AIR BRAKE, TANK VEHICLES, TOW TRUCK
NYS PESTICIDE TECHNICIAN – CATEGORY 6A

REFENCES

Will be furnished upon request.

Lake Casse Park District Advisory Board
193 Shear Hill Rd
Mahopac, New York 10541
LakeCasse@Gmail.com
845-628-6200

November 27, 2015

Town Supervisor Schmitt
And Members of the Town Board
Town of Carmel Town Hall
60 McAlpin Ave.this letter
Mahopac, New York 1054

RE:Terry Kelly – Referral for Lake Casse Park District Property Manager, 193 Shear Hill Rd.s

Town Supervisor Schmitt
And Members of the Town Board:

On Behalf of the Lake Casse Advisory Board we would like to refer Terry Kelly for the position of Property Manager for the Lake Casse Park District.

Terry has been an active community member for the last 3 years serving our park district by heading the Building and Grounds Committee. Terry volunteers his time to work on projects to improve the park district such as clearing lake shore access for fishing, repainting and repairing decks and life guard chairs, helped build and erect a new informational board at our beach entrance and does grounds clean up as well as prepping the grounds for parties and events. He has been present during all phases of our renovations to the club house and assisted in many ways.

Terry has worked alongside Bob Krontilik, our long time property manager; who has helped familiarize Terry with the club house, park district grounds and the lake requirements. Knowledge and familiarity of the property is crucial to effectively managing the park district and its lake.

With over 10 years of service working with the NYS Thruway Authority and 3 years as a supervisor, he has the experience in managing property, lawn and grounds maintenance, snow removal and scheduling. All these skills are pertinent to the property manager's job description.

Lastly, with all the investments and improvements we have made over the last few years it's important to have someone who really takes ownership and a watchful eye on things. Terry is a Lake Casse resident who resides directly across the street from the Lake Casse entrance. He can quickly access the property, easily monitor the grounds and can quickly tend to the needs of the property in an emergency or to show it for rentals.

Thank you for taking this time to consider our referral.

Sincerely,

Kim Kugler
Lake Casse Advisory Board

Cc: John Aquina
Amanda Guszack
Bill Siclari
Scott Sterbins
Lourdes Valle
Mario Viscovich

DATE: December 2, 2015

NAME OF CONTRACTOR: Terence Kelley

NAME OF REFERENCE: Richard Germani

TYPE OF PROJECT: Lake Casse Maintenance Contract R2015-005

	SUPERIOR				GOOD					POOR
QUALITY OF WORK:	10	9	8	7	6	5	4	3	2	1
STAFF/SUBCONTRACTING:	10	9	8	7	6	5	4	3	2	1
n/a										
ALL WORK IAW APPROVALS:	10	9	8	7	6	5	4	3	2	1
n/a										
MEETING SCHEDULES:	10	9	8	7	6	5	4	3	2	1
QUALITY & EXP OF ASSIGNED PERSONNEL:	10	9	8	7	6	5	4	3	2	1
n/a										
SHOP DRAWING SUBMITTALS:	10	9	8	7	6	5	4	3	2	1
n/a										
WERE THEY LOW BID?	10	9	8	7	6	5	4	3	2	1
SUBMISSION OF EXTRAS:	10	9	8	7	6	5	4	3	2	1
n/a										
AGREEABILITY ON CHANGE ORDERS:	10	9	8	7	6	5	4	3	2	1
GENERAL COOPERATIVENESS:	10	9	8	7	6	5	4	3	2	1

OVERALL EVALUATION:

Mr. Germani stated that he was Terence's supervisor until Terence himself was promoted to supervisor. He has the highest regard for his work ethics and quality of work.

Submitted by Donna Esteves

From: Maxwell,Mary Ann
To: Franzetti,Richard
Cc: Esteves,Donna
Subject: RE: 12-02-15 R2015-005 Lake Casse Maintenance RFP
Date: Wednesday, December 02, 2015 5:18:25 PM

There is $13,000 budgeted in 2016 for this expense. The expense of $75.00 per event (after 20 events) would have to have to be charged to a different line if necessary.

Mary Ann Maxwell
Town Comptroller
Town of Carmel
(845) 628-1500 ext 175
Fax (845) 628-7085
mam@ci.carmel.ny.us

From: Franzetti,Richard
Sent: Wednesday, December 02, 2015 3:59 PM
To: Maxwell,Mary Ann
Cc: Esteves,Donna
Subject: 12-02-15 R2015-005 Lake Casse Maintenance RFP

Mary Ann,

Can you please advise if there are sufficient funds to pay for these services (13,000 k per year for the next two years) Plus $75.00 per event.

Thanks

Richard J. Franzetti. P.E, BCEE, LEED AP
Town Engineer
60 McAlpin Avenue
Mahopac, New York 10541
Phone - (845) 628-1500 ext 181
Fax – (845) 628-7085
Cell – (914) 843-4704
rjf@ci.carmel.ny.us

This communication may be confidential and is intended for the sole use of the addressee(s). No use or reproduction of the information provided is permitted without the written consent of the Town of Carmel. If you are not the intended recipient, you should not copy, disclose or take any action in reliance on this communication. If you have received this communication in error, please notify the sender by reply e-mail and delete the message and any attached documents.

Richard J.Franzetti, P.E.
Town Engineer

(845) 628-1500
(845) 628-2087
Fax (845) 628-7085

Office of the Town Engineer
60 McAlpin Avenue
Mahopac, New York 10541

#13

MEMORANDUM

To: Carmel Town Board

From: Richard J. Franzetti P.E. Town Engineer

Date: December 3, 2015

Re: Trough and Skimmers CSD#4

☑ Work Session 12/9/15

☐ Agenda

The New York Department of Environmental Conservation (NYSDEC), on November 5, 2015, performed a comprehensive inspection of the Carmel Sewer District #4 (CSD 4) wastewater treatment plant (WWTP). The NYSDEC noted that there was floating sludge on the surface of the primary and secondary clarifiers.

Severn Trent Environmental Services (STES), the operators for CSD 4, has advised the Engineering Department (Department) that installation scum trough and weirs at the primary clarifier will address the NYSDEC concerns. The Board may recall that in September of this year the Engineering Department (Department) requested that the secondary clarifier drive, along with scum troughs and weirs were approved to be replaced at CSD 4.

In order to address the NYSDEC comment, this Department requested that STES provide a quote for scum troughs, baffles and weir plates for the primary clarifier. As STES recently received similar quotes in September for this equipment, STES requested if the manufacturer would maintain the costs provided in the previous quote which was agreed too. The following quotes (attached) to purchase the necessary parts:

	Company/Brand	Cost
1.	Jedonna, LLC	$9,147.90
2.	Tam Enterprises.	$11,583.84
3.	Weststar Inc.	$11,840.90

The cost for installation is $2,900.00

This Department spoke with the Town of Carmel Comptroller and she indicated that there are sufficient funds in the CSD 4 budget for this work

The installation of this equipment will help the Town maintain regulatory compliance at the WWTP.

This Department requests that the Town Board authorize the purchase of this equipment from Jedonna, LLC at cost of $9,147.90. The cost for installation which will be performed by STES is $2,900.00. The total cost is 12,047.90. I request that this matter be placed on the next Town Board work session.

NEW YORK STATE DEPARTMENT OF ENVIRONMENTAL CONSERVATION

Division of Water, Region 3
100 Hillside Avenue, Suite 1W, White Plains, NY 10603
P: (914) 428-2505 I F: (914) 428-0323
www.dec.ny.gov

November 9, 2015

Mr. Kenneth Schmitt.
Town Supervisor
Carmel Town Hall
60 McAlpin Avenue
Mahopac, NY 10541

Re: Comprehensive Inspection
Carmel SD #4 Lake Secor WWTP
(T) Carmel, Putnam County
SPDES No. NY0105252

Dear Supervisor Schmitt:

On November 5, 2015, an inspection of the above facility was performed to evaluate compliance with the State Pollution Discharge Elimination System (SPDES) permit and Article 17 of the NYS Environmental Conservation Law. A copy of the inspection report is enclosed.

The following deficiencies were noted:

1) Floating sludge on surface of the primary and secondary clarifiers.
2) White slime growth on RBC #1 media.
3) UV Bank B intensity meter faulty.

Please address the above items in a timely manner to ensure continued compliance with the SPDES permit.

Your cooperation in operating and maintaining this facility is appreciated. Contact me at (914) 428-2505, ext. 355, if you have any questions.

Sincerely,

Armand De Angelis
Environmental Program Specialist 2
Region 3

enc

Att: Mike Schiffer

Quotation

JEDONNA, LLC

1 PARK AVE. DERBY, CT . 06418

3/16/2015
DISTRICT 4

TO:
Severn-Trent
Carmel District #4
Lake Secor
Carmel, N.Y.

ITEM NO.	QTY	DESCRIPTION	UNIT	UNIT PRICE	TOTAL
1	1.00	2-15/16" x 96" shaft	ea	997.25	997.25
2	2.00	2-15/16" wall bearings	ea	410.92	821.84
3	2.00	8" x 96" scum troughs	ea	3,693.97	7,387.94
4	4.00	notched weir plates	ea	82.48	329.92
5	2.00	scum baffles	ea	101.90	203.80
6	6.00	top brackets	ea	23.02	138.12
7	6.00	bottom brackets	ea	23.02	138.12
8	1.00	Shipping	ea	500.00	500.00

Tax rate _____ %

Subtotal 10,961.79
Tax
Total 10,961.79

Westar Tech Services Corp.
PO Box 988
Middletown, NY 10940

September 18, 2015

Severn Trent
Carmel District #4
Lake Secor

Dear Mr. Batz:

Please see below for pricing on the job we discussed earlier today. Thank you for the opportunity to provide material costs.

(1)	96" Shaft	$1,427.00 ea	$1,427.00
(2)	15/16" Wall Bearings	$498.14 ea	$996.28
(2)	8"x96" Scum Troughs	$4,700.00 ea	$9,400.00
(4)	Notched Weir Plates	$125.00 ea	$500.00
(2)	Scum Baffles	$190.15 ea	$380.30
(6)	Top Brackets	$39.50 ea	$237.00
(6)	Bottom Brackets	$58.10 ea	$348.60

Sub Total:	$13,289.18
Shipping:	$975.00
Total:	$14,264.18

Sincerely,

Bill Reagan

TAM ENTERPRISES, INC.
WATER & WASTEWATER SPECIALISTS

114 Hartley Road
Goshen, NY 10924

Phone: (845)-294-8882
Fax: (845)-294-8883

Bill To

Severn Trent Environmental Services Group
1961 Route 6 R3
Carmel, NY 10512

Proposal

Date	Proposal #
9/21/2015	11320

P.O No.

Terms

Qty	Description	Rate	Amount
	Carmel Sewer District #1 Lake Secor		
	TAM Enterprises quotes the following materials for the above location		
1	2-15/16" x 96' shaft	1,275.00	1,275.00
2	2-15/16" wall bearings	500.08	1,000.16
2	8" x 96" Scum Troughs	4,575.00	9,150.00
4	Notched Weir Plates	99.64	398.56
2	Scum Baffles	175.11	350.22
6	Top Brackets	65.79	394.74
6	Bottom Brackets	49.22	295.32
1	Freights/Handling	995.00	995.00

A Service Charge of 1.5%, 18% APR, will be added to all overdue accounts
Accounts are considered overdue on the 31st day past the invoice date
You will also be liable for all legal and collection fees.

Total $13,859.00

Payments/Credit

Customer Signature:

Accepted By:

24 Hour Emergency Service • Hydro Vacuum Excavation • Pump Station, Installation & Maintenance
High Pressure Water Jetting • Video Inspection of Underground Lines • Installation of Water & Sewer Lines
Clearing of Catch Basins • Man Hole Rehabs • Sewer & Water Plant Rehabs • Confined Space Entry
Pipe Lining Services • Soil Remediation Services • Pipe Location Services • Industrial Tank Pumping
Excavation Services • Emergency Sewer By pass Pumping • Emergency Utility Services

Severn Trent Services
1961 Route 6, Rear 3
Carmel, NY 10512
United States

T: +1 845 228 0460
F: +1 845 228 0465

www.severntrentservices.com

TOWN OF CARMEL

ENGINEERING

REQUEST FOR PURCHASE OR REPAIR

District : SD # 4

Date of Request: 12-2-15

Item requested: secondary clarifier drive and scum collector repair parts

Purpose of item: function of clarifier this is a regulatory compliance issue

Estimated age of equipment to be replaced / repaired 30 years

Estimated life expectancy of new equipment / repair: 20 years

Labor cost for installation and or repair: $2,900.00

Vendor # 1: Jeddonia LLC	Cost: $9147.90
Vendor # 2: TAM ent.	Cost: $11583.84
Vendor # 3: Weststar inc	Cost: $11840.90

Correspondence should be addressed to:
Severn Trent Environmental Services, Inc.

From: Maxwell,Mary Ann
To: Esteves,Donna; Franzetti,Richard
Subject: RE: 12-2-15 Sd4 Scum trough and weir
Date: Thursday, December 03, 2015 9:59:03 AM

Yes there are sufficient funds in CSD #4 for this purchase

Mary Ann Maxwell
Town Comptroller
Town of Carmel
(845) 628-1500 ext 175
Fax (845) 628-7085
mam@ci.carmel.ny.us

From: Esteves,Donna
Sent: Thursday, December 03, 2015 9:11 AM
To: Franzetti,Richard
Cc: Maxwell,Mary Ann
Subject: RE: 12-2-15 Sd4 Scum trough and weir

Yes there are sufficient funds for this purchase, however, I will need to do a budget transfer of approximately $6500 to the .0020 line to cover the cost of the new equipment. The replacement parts and labor will be charged to the .0040 line.

Mary Ann, please confirm…..

From: Franzetti,Richard
Sent: Wednesday, December 02, 2015 4:37 PM
To: Esteves,Donna
Subject: FW: 12-2-15 Sd4 Scum trough and weir

Donna,

Do we have sufficient funds in CSD 4 to cover the additional scum troughs.

R

Richard J. Franzetti. P.E, BCEE, LEED AP
Town Engineer
60 McAlpin Avenue
Mahopac, New York 10541
Phone - (845) 628-1500 ext 181
Fax – (845) 628-7085
Cell – (914) 843-4704
rjf@ci.carmel.ny.us

This communication may be confidential and is intended for the sole use of the addressee(s). No use or reproduction of the information provided is permitted without the written consent of the Town of Carmel. If you are not the intended recipient, you should not copy, disclose or take any action in reliance on this communication. If you have received this communication in error, please notify the sender by reply e-mail and delete the message and any attached documents.

From: Maggio, Vincent [mailto:Vincent.Maggio@STServices.com]
Sent: Wednesday, December 02, 2015 4:35 PM
To: Franzetti,Richard
Cc: Batz, Michael
Subject: 12-2-15 Sd4 Scum trough and weir

Hi Rich,
Attached are the quotes for SD4 Scum trough and weir for the second set of clarifier.

Vinny Maggio
Severn Trent Services
Carmel NY
Cell 914-490-7985
office 845-228-0460
Please update Email vincent.maggio@stservices.com

Richard J.Franzetti, P.E.
Town Engineer

(845) 628-1500
(845) 628-2087
Fax (845) 628-7085

#14

Office of the Town Engineer
60 McAlpin Avenue
Mahopac, New York 10541

MEMORANDUM

To: Carmel Town Board

From: Richard J. Franzetti P.E. Town Engineer

☑ Work Session 12/9/15

Date: December 3, 2015

☐ Agenda

Re: CWD#2 Filter Bag Replacement

Severn Trent Environmental Services (STES), the operators for Carmel Water District # 2 (CWD 2), has advised the Engineering Department (Department) that filter screens at the water treatment plant (WTP) are outside of serviceable life span and are beginning to tear and separate. There are three (3) filters at CWD 2 each with 19 filter screens (Total of 57 filter screens)

As the Board is aware filtration at the CWD 2 WTP is completed by means of a Diatomaceous Earth (DE) system. One of the components of the system are the filter bags with cover the suction manifold and allow the DE to build up thus creating a filter layer. The tearing and separating of the filter bags results in a loss of DE and diminished filter capability which results in a reduction of finished water quality. These filter bags need to be replaced

Because of the uniqueness and age of the CWD 2 WTP, STES is able to identify only one (1) manufacturer, Treatment Specialists, who can supply the requisite filter bags. STES requested and received the following cost for the filter bag installation:

- 57 (48"x60") filter bags are need for the three (3) filter units as a cost of $190.00 per filter bag. Total cost $10,830.00.
- Installation cost is $4,950.00 (for all 57 filter bags)

The total cost for purchase and installation for the 57 filter screens is $15,780.00.

STES has indicated that the current filter screens are approximately three (3) years old and have a life expectancy of three (30 to five (5) years.

This Department spoke with the Town of Carmel Comptroller and she indicated that there are sufficient funds in the CWD 2 budget for this work (see attached).

This Department requests that the Town Board authorize the purchase and installation of the filter bags from Treatment Specialist at a total cost of $15,780.00. I request that this matter be placed on the next Town Board work session.

From: Maggio, Vincent [mailto:Vincent.Maggio@STServices.com]
Sent: Wednesday, December 02, 2015 4:29 PM
To: Franzetti,Richard
Cc: Batz, Michael
Subject: Fw: Quote MM 2015-1202 12-2-15 WD2 filter screen-cover

Rich,
Attached WD2 filter screen replacements sole source. Seams are separating will effect final turbidity if it gets worse.

Vinny Maggio
Severn Trent Services
Carmel NY
Cell 914-490-7985
office 845-228-0460
Please update Email vincent.maggio@stservices.com

From: Mary Zielinski <mary@treatmentspecialties.net>

Sent: Wednesday, December 2, 2015 2:12 PM
To: Maggio, Vincent
Subject: Quote MM 2015-1202

Town of Carmel,

Dear Vinnie,

We are pleased to quote the following:

QTY	Description	Price
38	48 x 60 BIF Corner Outlet Cover with Zippers for Filter #1 & 2	$ 190.00 each
19	48 x 60 MM Corner Outlet Cover with Zippers for Filter #3	$ 190.00 each

Plus freight
FOB: Ramsey, NJ
Delivery: 3-4 weeks ARO
Terms: Net 30 days

Quote Valid for 60 Days

Best Regards,
Mary Zielinski
Treatment Specialties/Mer-Made Filter
div.of Liquid-Solids Separation Corp.
25 Arrow Road
Ramsey,NJ 07446
201-236-1720 x104
201-236-0291 fax
mary@treatmentspecialties.net

This email has been sent from a virus-free computer protected by Avast.
www.avast.com

Severn Trent Services
1961 Route 6, Rear 3
Carmel, NY 10512
United States

T: +1 845 228 0460
F: +1 845 228 0465

www.severntrentservices.com

TOWN OF CARMEL

ENGINEERING

REQUEST FOR PURCHASE OR REPAIR

District : WD2

Date of Request: 12-2-15

Item requested: DE Filter screen/cover

Purpose of item: Water filtration

Estimated age of equipment to be replaced / repaired 3 yearss

Estimated life expectancy of new equipment / repair: 3-5

Labor cost for installation and or repair: $4950.00

Vendor # 1: Treatment Specialties Cost: $10830

Vendor # 2: Cost:

Vendor # 3: Cost:

Correspondence should be addressed to:
Severn Trent Environmental Services, Inc.

From: Maxwell,Mary Ann
To: Franzetti,Richard
Cc: Esteves,Donna
Subject: RE: Quote MM 2015-1202 12-2-15 WD2 filter screen-cover
Date: Thursday, December 03, 2015 10:30:20 AM

Yes but this will leave us with only $9,106 in the contractual repair line through the end of the year.

Mary Ann Maxwell
Town Comptroller
Town of Carmel
(845) 628-1500 ext 175
Fax (845) 628-7085
mam@ci.carmel.ny.us

From: Franzetti,Richard
Sent: Thursday, December 03, 2015 10:21 AM
To: Maxwell,Mary Ann
Cc: Esteves,Donna
Subject: RE: Quote MM 2015-1202 12-2-15 WD2 filter screen-cover

We need to use the attached quote which included labor at $4,950.

Do we still have sufficient funds.

Richard J. Franzetti, P.E, BCEE, LEED AP
Town Engineer
60 McAlpin Avenue
Mahopac, New York 10541
Phone - (845) 628-1500 ext 181
Fax – (845) 628-7085
Cell – (914) 843-4704
rjf@ci.carmel.ny.us

This communication may be confidential and is intended for the sole use of the addressee(s). No use or reproduction of the information provided is permitted without the written consent of the Town of Carmel. If you are not the intended recipient, you should not copy, disclose or take any action in reliance on this communication. If you have received this communication in error, please notify the sender by reply e-mail and delete the message and any attached documents.

From: Maxwell,Mary Ann
Sent: Thursday, December 03, 2015 10:04 AM
To: Franzetti,Richard
Cc: Esteves,Donna
Subject: RE: Quote MM 2015-1202 12-2-15 WD2 filter screen-cover

Yes there is sufficient funds in CWD 2 for this purchase.

Mary Ann Maxwell
Town Comptroller
Town of Carmel
(845) 628-1500 ext 175
Fax (845) 628-7085
mam@ci.carmel.ny.us

From: Franzetti,Richard
Sent: Thursday, December 03, 2015 9:04 AM
To: Maxwell,Mary Ann
Cc: Esteves,Donna
Subject: FW: Quote MM 2015-1202 12-2-15 WD2 filter screen-cover

Mary Ann,

Please confirm

Richard J. Franzetti. P.E, BCEE, LEED AP
Town Engineer
60 McAlpin Avenue
Mahopac, New York 10541
Phone - (845) 628-1500 ext 181
Fax – (845) 628-7085
Cell – (914) 843-4704
rjf@ci.carmel.ny.us

This communication may be confidential and is intended for the sole use of the addressee(s). No use or reproduction of the information provided is permitted without the written consent of the Town of Carmel. If you are not the intended recipient, you should not copy, disclose or take any action in reliance on this communication. If you have received this communication in error, please notify the sender by reply e-mail and delete the message and any attached documents.

From: Esteves,Donna
Sent: Thursday, December 03, 2015 9:03 AM
To: Franzetti,Richard
Subject: RE: Quote MM 2015-1202 12-2-15 WD2 filter screen-cover

Yes we have sufficient funds in the budget for this purchase.

From: Franzetti,Richard
Sent: Wednesday, December 02, 2015 4:35 PM
To: Esteves,Donna
Subject: FW: Quote MM 2015-1202 12-2-15 WD2 filter screen-cover

Donna,

Do we have sufficient funds to cover the cost of new filters at CWD 2?

Richard J. Franzetti. P.E, BCEE, LEED AP
Town Engineer
60 McAlpin Avenue
Mahopac, New York 10541
Phone - (845) 628-1500 ext 181
Fax – (845) 628-7085
Cell – (914) 843-4704
rjf@ci.carmel.ny.us

This communication may be confidential and is intended for the sole use of the addressee(s). No use or reproduction of the information provided is permitted without the written consent of the Town of Carmel. If you are not the intended recipient, you should not copy, disclose or take any action in reliance on this communication. If you have received this communication in error, please notify the sender by reply e-mail and delete the message and any attached documents.

From: Maggio, Vincent [mailto:Vincent.Maggio@STServices.com]
Sent: Wednesday, December 02, 2015 4:29 PM
To: Franzetti,Richard
Cc: Batz, Michael
Subject: Fw: Quote MM 2015-1202 12-2-15 WD2 filter screen-cover

Rich,
Attached WD2 filter screen replacements sole source. Seams are separating will effect final turbidity if it gets worse.

Vinny Maggio
Severn Trent Services
Carmel NY
Cell 914-490-7985
office 845-228-0460
Please update Email vincent.maggio@stservices.com

From: Mary Zielinski <mary@treatmentspecialties.net>
Sent: Wednesday, December 2, 2015 2:12 PM
To: Maggio, Vincent
Subject: Quote MM 2015-1202

Town of Carmel,

Dear Vinnie,

We are pleased to quote the following:

QTY	Description	Price
38	48 x 60 BIF Corner Outlet Cover with Zippers for Filter #1 & 2	$ 190.00 each
19	48 x 60 MM Corner Outlet Cover with Zippers for Filter #3	$ 190.00 each

Plus freight
FOB: Ramsey, NJ
Delivery: 3-4 weeks ARO
Terms: Net 30 days

Quote Valid for 60 Days

Best Regards,
Mary Zielinski
Treatment Specialties/Mer-Made Filter
div.of Liquid-Solids Separation Corp.
25 Arrow Road
Ramsey,NJ 07446
201-236-1720 x104
201-236-0291 fax
mary@treatmentspecialties.net

This email has been sent from a virus-free computer protected by Avast.
www.avast.com

Richard J.Franzetti, P.E.
Town Engineer

(845) 628-1500
(845) 628-2087
Fax (845) 628-7085

Office of the Town Engineer
60 McAlpin Avenue
Mahopac, New York 10541

#15

MEMORANDUM

To: Carmel Town Board

From: Richard J. Franzetti P.E. Town Engineer (RJF)

☑ Work Session 12/9/15

Date: December 2, 2015

☐ Agenda

Re: Sand Filter Influent Pumps CSD#2

Severn Trent Environmental Services (STES), the operators for Carmel Sewer District #2 (CSD 2), have alerted the Engineering Department (Department) that two (2) of the five (5) sand filter influents pumps are not functioning. The CSD 2 wastewater treatment plant operates three (3) pumps at a time with two (2) redundant pumps. Currently the system is operating without redundant pumps.

STES requested and received the following quotes (attached) to replace these pumps:

	Company/Brand	Cost
1.	Reiner Pump	$10,000.00 per pump - $20,000.00 total
2.	SB Church	$11,809.00 per pump - $23,618.00 total
3.	PCS	$18,325.00 per pump - $36,650.00 total

It should be noted that the original pumps were installed approximately 7 years ago and the life expectancy of the new equipment is approximately 5 -10 years.

This Department spoke with the Town of Carmel Comptroller and she indicated that there are sufficient funds in the CSD#2 budget. A copy of this correspondence is attached.

The purchase of installation of these pumps is important because if the existing pumps are to fail the treatment process will not function properly and a permit exceedance can occur. The Town would then be in violation of our State Pollution Discharge Elimination System (SPDES) Permit.

This Department requests that the Town Board authorize the purchase of these pumps at cost of $20,000.00 and that this request be placed on the next Town Board work session.

270 Sparta Ave. Suite 104, PMB120 Sparta, NJ 07871
EMAIL jnewgarde@reinerpump.com FAX 973.347.4588 TEL 973.347.9000
Water and Wastewater Specialist www.reinerpump.com
REINER PUMP SYSTEMS

June 4, 2015

Vinny Maggio
Severn Trent Environmental Services
vmaggio@stes.com

Re: Sand Filter Influent Pump #2

Vinny:

Reiner Pump Systems is pleased to offer the following proposal for your review:

One (1) American Turbine vertical turbine pump and motor as follows:

- Single stage rated for 940 GPM @ 30 feet TDH
- Basket strainer
- 209.3 inch total pump length
- Hi-Pro cast iron discharge head with stuffing box
- 10HP 1800 RPM, 230/460V, WP1 VHS motor
- Standard paint on bowl, column, and discharge head

Price: $10,000.00
FOB Factory, Freight Prepaid and Allowed

Notes & Exceptions:

1. No spares or testing
2. Installation is not included.
3. Standard delivery is in a box truck. Additional charges apply for a flatbed delivery.
4. Rigging and offloading by owner
5. This quotation is for the items listed or stated above. No other items should be assumed or implied as being provided.
6. Reiner Pump Systems standard terms and conditions apply.

Delivery: Approximately 4 weeks after receipt of purchase order and full release to production
This quote is valid for 30 days from the date above.
Prices to not include any state, federal, or local taxes
Terms: Net 30 Days

Thank you for your interest in Reiner Pump Systems. Please don't hesitate to contact us if we can be of further assistance.

Sincerely,

Jamie Newgarde

Jamie Newgarde
Reiner Pump Systems, Inc.

Company: Q-52972-1
Name:
Date: 6/3/2015

Pump:

Size: 10-X-100 (1 stage)

Type: VERT.TURB.ENCLOSED
Synch speed: 1800 rpm

Speed: 1760 rpm
Dia: 7.12 in

Curve: N10-X-10

Impeller: 100

Specific Speeds:

Ns: 3900
Nss: 8900

Dimensions:

Suction: ---
Discharge: ---

Vertical Turbine:

Bowl size: 9.75 in
Max lateral: 0.87 in
Thrust K factor: 10.8 lbf/ft

Pump Limits:

Temperature: 180 °F
Pressure: 260 psi g
Sphere size: 1.25 in

Power: 276 hp
Eye area: 27.4 in²

Search Criteria:

Flow: 940 US gpm

Head: 30 ft

Fluid:

Water
Density: 62.32 lb/ft³
Viscosity: 0.9946 cP

Temperature: 68 °F
Vapor pressure: 0.3391 psi a
Atm pressure: 14.7 psi a

NPSHa: —

Motor:

Standard: NEMA
Enclosure: WP-I

Size: ~~15 hp~~ 10HP
Speed: 1800 rpm
Frame: 254

Sizing criteria: Max Power on Design Curve

--- Duty Point ---	
Flow:	942 US gpm
Head:	30.1 ft
Eff:	71.7%
Power:	9.94 hp
NPSHr:	10.6 ft
--- Design Curve ---	
Shutoff head:	41.5 ft
Shutoff dP:	18 psi
Min flow:	198 US gpm
BEP:	72.5% @ 988 US gpm
NOL power:	10 hp @ 988 US gpm
-- Max Curve --	
Max power:	14.3 hp @ 1125 US gpm

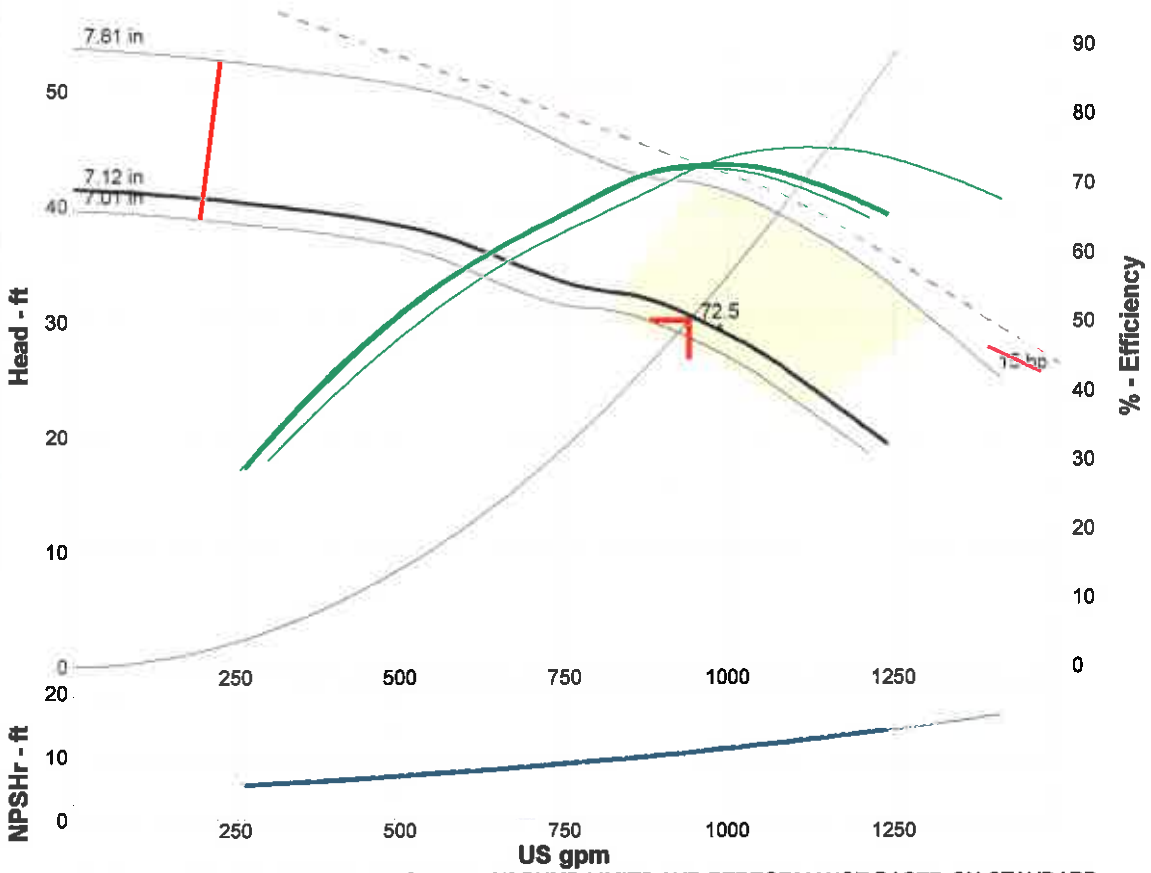

NOTES (UNLESS OTHERWISE SPECIFIED): [1] PUMP LIMITS AND PERFORMANCE BASED ON STANDARD MATERIALS OF CONSTRUCTION. [2] PERFORMANCE SHOWN AS TYPICALLY, CONTACT FACTORY FOR GUARANTEED PERFORMANCE

Performance Evaluation:

Flow US gpm	Speed rpm	Head ft	Efficiency %	Power hp	NPSHr ft
1128	1760	24	69.8	9.77	12.6
940	1760	30.1	71.6	9.94	10.6
752	1760	33.7	65.2	9.69	8.91
564	1760	37.2	55	9.55	7.44
376	1760	39.2	39.2	9.38	6.22

VERTICAL TURBINE PUMP

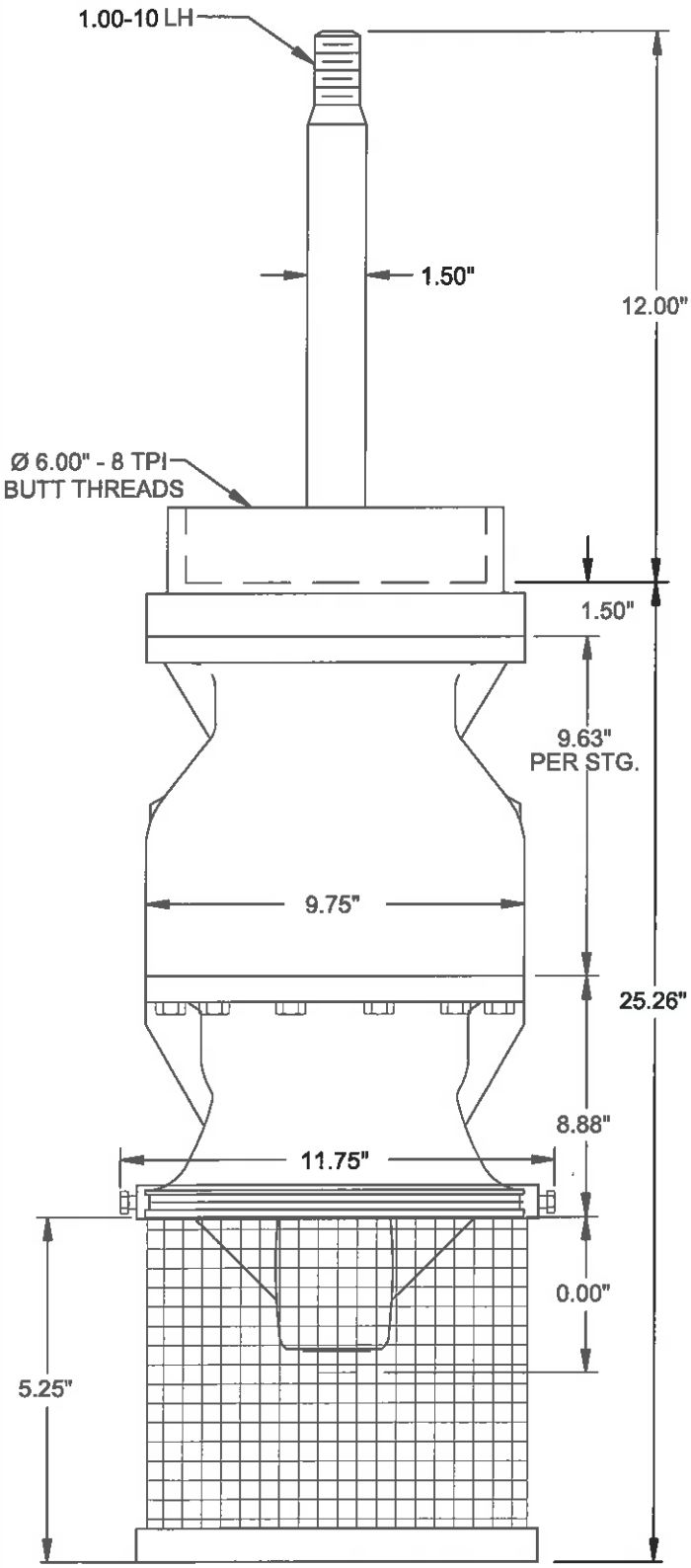

BOWL

1 STAGE 10-X-100 BOWL ASSEMBLY

940 US GPM FLOW 30 FT. HEAD

STRAINER X YES ___ NO TYPE BASKET

MATERIALS

BOWL CI EN
IMPELLER 876 BZ (STD); STATIC BAL.
COLUMN ADAPTER DUCTILE IRON
SUCTION BELL/CASE CAST IRON
BOWL SHAFT SS (416)
COLLETS 1215 CS
SUCTION BEARING C93200 (STD BZ)
INTERMEDIATE BEARING C932 x BUNA-N (COMBO)
TOP BEARING C932 x BUNA-N (COMBO)
BOLTING GR. 5
STRAINER GALV
WEAR RING (B) N/A
WEAR RING (I) N/A
BOWL ID SURFACE FINISH VITREOUS ENAMEL
BOWL OD SURFACE FINISH STD PAINT - OD

PROJECT NAME:
Q-52972-1

FURNISHED BY:

DRAWING NOT TO SCALE.
ALL DIMENSIONS IN INCHES.
SINGLE STAGE ASSEMBLY SHOWN.
NOT FOR CONSTRUCTION UNLESS CERTIFIED.

REV - 2

MFG. BY NATIONAL PUMP COMPANY

VERTICAL TURBINE PUMP

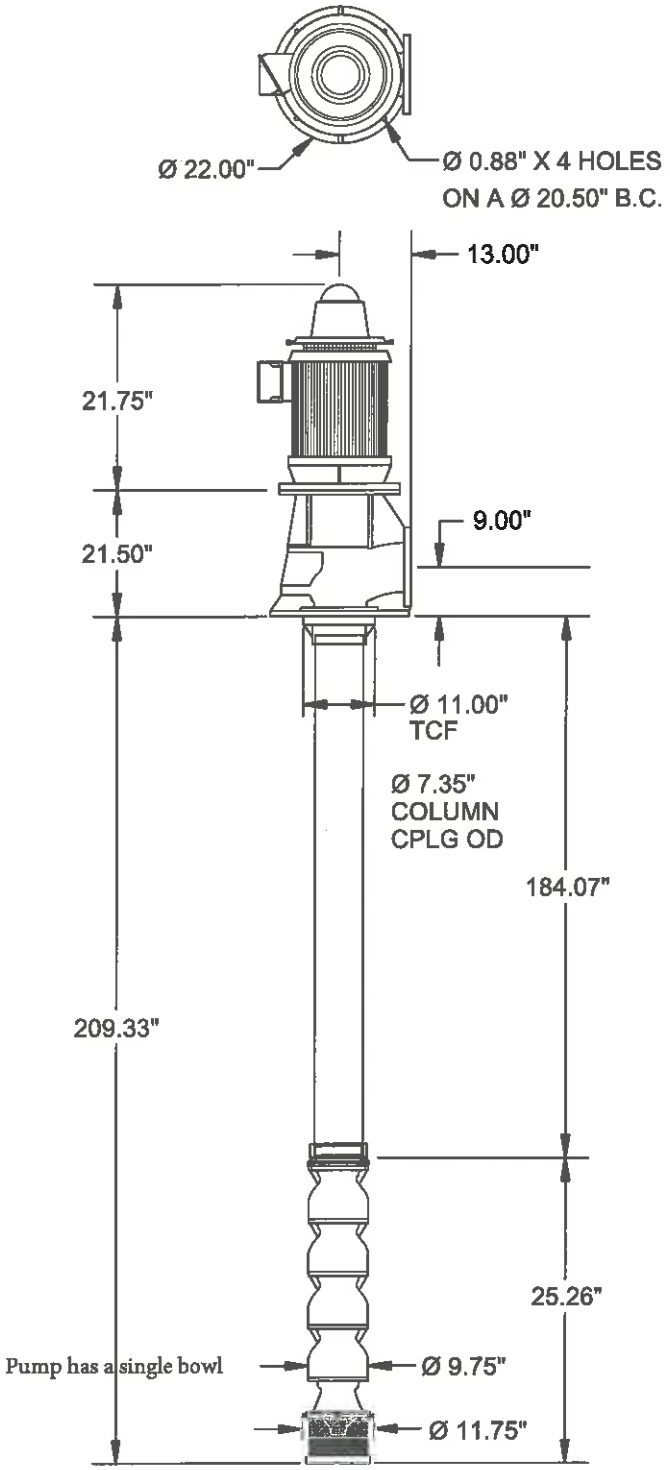

MOTOR

MFGR US HP 10 ENCLOSURE WP1 RPM 1800
TYPE VHS PHASE 3 HERTZ 60 VOLTS 230/460
S.F. 1.15 EFF. ENG BD 10.00" BX 1.00"
KWY 0.25" CPLG NRR THRUST HIGH FRAME 215TP
MODEL NO. HO10E2BLE CD 17.56"

DISCHARGE HEAD

MODEL HI-PRO (CI) W/10.0", 12.0", & 16.5" BD
6" - ANSI CLASS 150-FF DISCHARGE FLANGE
X PACKING BOX NO SPLIT PACKING GLAND
N/A MECHANICAL SEAL N/A
N/A TENSION ASSEMBLY NO GROUT PLATE

COLUMN

6" X 0.280" WALL X THD N/A FLG'D
LINESHAFT X OPEN N/A ENCLOSED
SHAFT DIA 1.00" TPI 10 TPI TUBE DIA N/A

BOWL

1 STAGE 10-X-100 BOWL ASSEMBLY
940 US GPM FLOW 30 FT. HEAD
STRAINER X YES NO TYPE BASKET

MATERIALS

BOWLS	CI EN	COLUMN	A53, GR B
IMPELLERS	876 BZ (STD)	COLUMN CPLG	DI
BWL SFT	416 SS	SHAFT TUBE	N/A
COLLETS	1215 CS	BRG RET	BZ
BOWL BRG	BOWL DWG	LINE SFT BRGS	RUBBER
BOLTING	GR. 5	LINE SHAFT	SS (416)
TENSION BRG	N/A	SHAFT SLEEVES	N/A
MECH SEAL	N/A	SHAFT CPLG	SS (304)
GROUT PLATE	N/A	PACKING	GRAPHITE
BOWL WR	N/A	STRAINER	GALV
IMP WR	N/A	HEAD	CAST IRON
HEAD SHAFT	1045 CS	HEAD SHAFT CPG	CS (1215)

BOWL SURFACE FINSIH STD PAINT; OD
COLUMN SURFACE FINISH STD PAINT; OD
HEAD SURFACE FINISH STD PAINT; OD

PROJECT NAME
Q-52972-1

WEIGHT & THRUST ESTIMATES

BOWL 178 LBS COLUMN 331 LBS HEAD 400 LBS
SHAFT 45 LBS TUBE 0 LBS DRIVER 220 LBS
HYD THRUST 324 LBS DRIVER MAX THRUST 2500 LBS

SPECIAL NOTE: ASSEMBLE AS A SCVT PUMP

ALL DIMENSIONS IN INCHES UNLESS OTHERWISE SHOWN.
FOUR STAGE ASSEMBLY SHOWN.
NOT FOR CONSTRUCTION UNLESS CERTIFIED. REV - 2

MFG. BY NATIONAL PUMP COMPANY

270 Sparta Ave. Suite 104, PMB120 Sparta, NJ 07871
EMAIL jnewgarde@reinerpump.com FAX 973.347.4588 TEL 973.347.9000
Water and Wastewater Specialist www.reinerpump.com

REINER PUMP SYSTEMS, INC.
STANDARD TERMS & CONDITIONS

WARRANTY:
All products are covered by the warranty of the specific manufacturer and subject to their standard terms and conditions. Reiner Pump Systems, Inc. is a manufacturer's representative and does not warranty the products, installations or deliveries. Copies of the specific manufacturer's warranty can be provided upon request.

LIABILITY LIMITATIONS:
Reiner Pump Systems, Inc. assumes no liability for loss of profits by reason of plant shutdown, non-operation, increase in expense of operation of other equipment or facilities, loss of production or progress of construction, whether resulting from delays in delivery or performance, faulty installation, breach of manufacturer's warranty, or any other special indirect, consequential, punitive, collateral, or liquidated damages.

INSTALLATION:
Buyer agrees to cause the products to be installed in accordance with the Manufacturer's instructions and will indemnify Reiner Pump Systems, Inc. against any and all damages, demands, suits, causes of action, claims and expenses arising directly or indirectly out of Buyer's failure to cause the products to be so installed.

PAST DUE ACCOUNTS:
Past due accounts will be assessed a finance charge equal to 1 ½ % per month. If an account is placed for collections, buyer must pay an additional 15 % to cover costs, expenses and attorney's fees.

PAYMENT:
All payments should be remitted to: Reiner Pump Systems, Inc., 270 Sparta Avenue, Suite 104, PMB 120, Sparta, NJ 07871.

DELIVERY:
Shipping dates are estimates only and are based on Manufacturer's production schedules and commitments by suppliers. Delay in shipment or variance from shipping schedule shall not be cause for cancellation or claim for damage. If, at buyer requests, shipment is delayed, the above payment terms commence running as of the date when ready for shipment.

RETURN POLICY:
No returns will be permitted without prior written consent of Reiner Pump Systems, Inc.

CANCELLATIONS:
A 25% cancellation charge will apply to any canceled orders prior to 'release to fabrication/manufacture'. Cancellations after 'release to fabrication/manufacture' will be invoiced in full.

FORCE MAJEURE LIMITATIONS:
Reiner Pump Systems, Inc. shall not be liable for any loss, damage or expense resulting from delay or failure of performance of Reiner Pump Systems, Inc.'s obligations hereunder if such delay or failure is due to acts of God or the public enemy, strikes, labor troubles, fire, explosions, riots, war governmental orders, or restrictions, shortages of materials or labor, delay in transportation, theft, accident, or any other cause for which Reiner Pump Systems, Inc. is not responsible.

The Stephen B. Church Company
49 Great Hill Road
Oxford, CT
Since 1886

March 4, 2015

E-mail to
Vinnie Maggio
Carmel, NY
Phone 914-490-7985
E-mail vincent.maggio@STServices.com

From Jim Duncan
The Stephen B Church Co
Oxford CT
203 888 2132
E-mail StephenBCh@aol.com

Dear Vinnie -

With this e mail, we wish to provide you with our proposal for providing components to rebuild one of the turbine pumps at the Sewage Treatment Plant.

We ask that remove the old pump and bring us the old components, including the discharge head, bowl assembly, column pipe, lineshaft, spider bearings and motor.

When we done similar projects for Carmel in the past, we reuse certain of the old components, including the discharge head, stuffing box, column pipe flanges including the top column flange, and the adjustable shaft coupling (located right below the motor.) We assume in quoting on this project that these components can be cleaned, painted, and reused.

We propose to provide a new single stage 10 inch diameter bowl assembly selected to deliver 940 gallons per minute at 33 feet total discharge head. This bowl assembly would fully load the 10 horsepower motor. The bowl assembly would be provided with stainless steel bolting, a stainless steel basket strainer, and a bell-type suction bowl. Pump submittal information and a catalog curve are attached.

We also propose to have the discharge head and stuffing box sandblasted. We would replace the bushing in the stuffing box assembly and we would reuse one or more of the column flanges by removing it from the existing pipe and rewelding it to a new piece of column pipe. We would provide 15 feet of 6 inch column pipe and 1 inch stainless steel lineshaft.

Your cost for the components and work proposed would be $9221. We assume that you would deliver the parts to us and pick them up at our shop when they are ready. We can arrange for delivery or pickup at $275 each. Delivery on the pump components is expected to be 14 weeks from date of order.

We can provide a new 10 horsepower US vertical solid shaft motor, TEFC, 1800 rpm, inverter duty rated, for $2313 additional as long as the new motor is ordered at the same time as the pump components are ordered.

Thank you for asking us to quote on this project. If you have any questions, feel free to call.

Very truly yours,

Jim Duncan

Pump Data Sheet - Turbine 60 Hz

Company: Goulds Water Technology
Name:
Date: 3/3/2015

Customer:
Order No:

GOULDS WATER TECHNOLOGY
a xylem brand

Pump:

Size: 10DHHO (1 stage)

Type: Lineshaft
Synch speed: 1800 rpm

Speed: 1760 rpm
Dia: 6.125 in

Curve: E6410DDPC1

Impeller:

Specific Speeds:

Ns: 3880
Nss: ---

Dimensions:

Suction: ---
Discharge: ---

Vertical Turbine:

Bowl size: 9.5 in
Max lateral: 0.75 in
Thrust K factor: 15.5 lb/ft

Search Criteria:

Flow: 940 US gpm

Head: 33 ft

Fluid:

Water
SG: 1
Viscosity: 0.9946 cP

Temperature: 68 °F
Vapor pressure: 0.3391 psi a
Atm pressure: 14.7 psi a

NPSHa: ---

Motor:

Standard: NEMA
Enclosure: WPI

Size: 10 hp
Speed: 1800
Frame: 215

Sizing criteria: Max Power on Design Curve

Pump Limits:

Temperature: ---
Pressure: ---
Sphere size: 0.68 in

Power: ---
Eye area: ---

Data Point

Flow:	940 US gpm
Head:	33 ft
Eff:	80%
Power:	9.77 hp
NPSHr:	16.1 ft

Design Curve

Shutoff head:	46.7 ft
Shutoff dP:	20.2 psi
Min flow:	883 US gpm

BEP: 80.3% @ 960 US gpm

NOL power:
9.99 hp @ 1048 US gpm

Max Curve

Max power:
11.2 hp @ 1129 US gpm

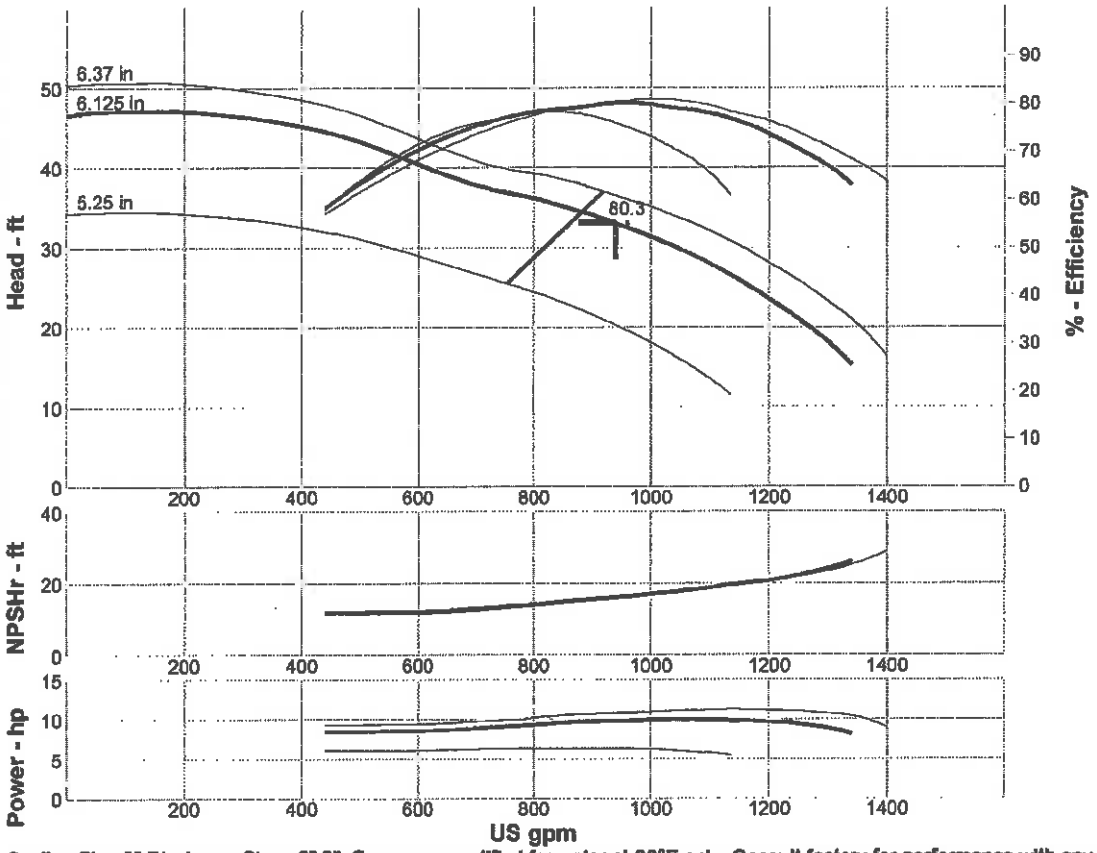

Suction Size-8" Discharge Sizes-6",8". Curves are certified for water at 60°F only. Consult factory for performance with any other fluid.

Performance Evaluation:

Flow US gpm	Speed rpm	Head ft	Efficiency %	Power hp	NPSHr ft
1128	1760	26.8	77	9.9	19.4
940	1760	33	80	9.77	16.1
752	1760	---	---	---	---
564	1760	---	---	---	---
376	1760	---	---	---	---

Goulds Water Technology

DIMENSIONAL OUTLINE

VIT-FFTM

1 Stage 6x10DHHO

GOULDS WATER TECHNOLOGY a xylem brand

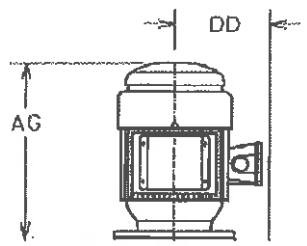

AG:	
BL:	29.32
CL:	N/A
COL:	180.00"
MIN SUB:	30.4
SL:	4.32
TPL:	209.3"
UG:	N/A
V:	
W:	
X:	
Y:	
Z:	
MAX:	13.75

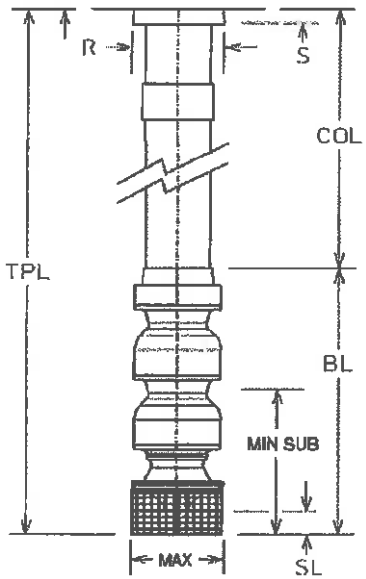

Pump Data

Size:	10DHHO
Stages:	1
BowlShaft:	1.69"
LineShaft:	1"
LineShaft Type:	Open
Column:	
Column:	6" Threaded
Bearing Spacing:	5 feet
Section Length:	5 feet
Head:	NONE
Flange (Disch.):	
Suct.:	
Seal:	
Strainer:	Bolt-On Basket
SubBase:	None
Motor Mounting:	P-base

Hydraulic Data

Flow (gpm):	940
Pump Head (ft):	28.3
TDH (ft):	33.0
Speed (rpm):	1760
Fluid:	Water
Temperature (F):	68
Viscosity:	0.9946
Spec.Grav:	1.00012

Miscellaneous

Thrust At Design (lb):	576
Thrust At Shutoff (lb):	788
Pumping Level(in):	12

Weight

Pump (lb):	963
Motor (lb):	220
Total (lb):	1183

Motor Data

Model:	VSS
Make:	USEM
HP:	10
RPM:	1800
Type:	TVI4
Efficiency:	93.0
Frame:	215VP
Ratchet:	NRR

Version: 4.18P

Customer:

Date: 03-03-2015

Goulds Water Technology

HYDRAULIC ANALYSIS
VIT-FFTM
1 Stage 6x10DHHO

GOULDS WATER TECHNOLOGY a xylem brand

Overall Pump Parameters

Size and Model:	10DHHO	Pump Operating Speed, RPM:	1760
Capacity, GPM:	940	Total Dynamic Head, Ft.:	33.0
Total Pump Length, In.:	209.3	Impeller Trim, In.:	6.1
Pump Type:	OpenSump	Head Type:	F:VIT
Pump K-Factor:	15.5	Number of Stages:	1
		Pumping Level, In.:	12.0

LineShaft-Related Data

Shaft Diameter, In.:	1	Shaft Limit, HP:	70
Shaft Material:	416SS	Matl Correction Fact:	1.18
LineShaft Length, In.:	180.00	Shaft Elongation, w/o Adder:	0.00
LineShaft Type:	Open	Impeller Running Clearance:	0.00

Bowl Data

Total Bowl Length, In.:	29.32	Bowl Diameter, In.:	9.5
Bowl Shaft Dia, In.:	1.69	Bowl Shaft Limit, HP:	374
		Bowl Shaft Material:	416SS

Column Data

Column Diameter, In.:	6	Column Load, Lb.:	-236.3
Wall Thickness, In:	0.280	Column Elongation, In.:	0.00
		Shutoff Column Elongation, In.:	0.00

HorsePower Data

Shaft Friction Loss, Hp.:	0.08	Thrust Load Loss, Hp.:	0.08
Bowl HP At Design, Hp.:	9.77	Motor HorsePower, Hp.:	10

Other Data

Hydraulic Thrust, Lb.:	511.6	Thrust at Design, Lb.:	576.0
Thrust at Shutoff, Lb.:	788.4	Actual Head above Grade, Ft.:	28.32
Available Lateral, In.:	0.75	Design Lateral, In.:	0.00
Shutoff Lateral, In.:	0.01		
Suction Pressure, psi:	0.0	Shutoff Disc Pressure, psi:	19.8
Column Loss, Ft.:	1.43	NPSHa, Ft.:	48.19
Head Loss, Ft.:	2.25	NPSHr, Ft.:	16.10
Total Loss, Ft.:	3.68	NPSH margin, Ft.:	32.09

Efficiency Data (Efficiencies estimated not guaranteed)

Bowl Efficiency:	80.00	Pump Efficiency:	69.97
Motor Efficiency:	93.00	Overall Efficiency:	65.08
		KWH/1000 gallons:	0.16

Component Weights

Bowl Weight, Lbs.:	140	Column Weight,Lbs.:	360
Head Weight, Lbs.:	463	Can Weight,Lbs.:	0
Motor Weight, Lbs.:	220	Total Pump Weight,Lbs.:	1183

Version: 4.18P Customer: Date: 03-03-2015

SECTIONAL
VIT-FFTM
1 Stage 6x10DHHO

GOULDS WATER TECHNOLOGY
a xylem brand

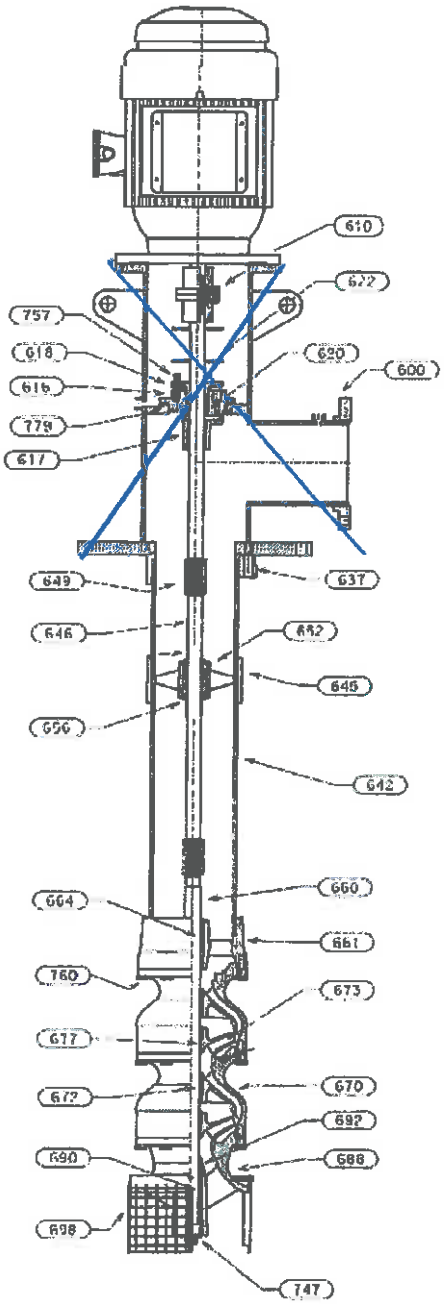

DISCHARGE HEAD ASSEMBLY

ITEM	NAME	Code	MATERIAL	ASTM
610	COUPLING- SHAFT	5933	CARBON STEEL 1018 ZINC	A108-99

COLUMN AND LINESHAFT ASSEMBLY

642	COLUMN PIPE	6501	BLACK PIPE SCH 40	A 53-98
645	COLUMN COUPLING	6501	BLACK PIPE SCH 40	A 53-98
646	LINESHAFT	2227	SST 416	A582M-95b
649	LINESHAFT COUPLING	2265	SST 416	A582M-95b
652	RETAINER- BEARING	1205	SST 304	A744M-00
656	LINESHAFT BEARING	5121	RUBBER EPDM	D3568-98

BOWL ASSEMBLY

660	SHAFT- BOWL	2227	SST 416	A582M-95b
661	BOWL- DISCHARGE	1003	CAST IRON CL30	A48-94ae1
664	BEARING- DISC BOWL	1109	FEDERALLOY BISMUTH BRZ	B584-00
670	BOWL- INTERMEDIATE	6911	CAST IRON CL30 ENAMEL	A48-94e1
672	BEARING- INT BOWL	1109	FEDERALLOY BISMUTH BRZ	B584-00
673	IMPELLER	1102	SILICON BRONZE C87600	B584-00
677	COLLET- IMPELLER	2242	CARBON STEEL 1018	A108-99
688	BOWL/BELL- SUCTION	1003	CAST IRON CL30	A48-94ae1
690	BEARING- SUCTION	1109	FEDERALLOY BISMUTH BRZ	B584-00
692	SANDCOLLAR	1205	SST 304	A744M-00
698	STRAINER- SUCTION	6913	SST 316 XPND METAL FL	A555-97
747	PLUG- PIPE	1046	MALLEABLE IRON	A197
760	CAPSCREW- HEX	2229	SST 316	A276-00a

ADDITIONAL PUMP COMPONENTS

The following is a list of the additional components you ordered.
Consult factory for any other components or services.

Component

Strainer
SST Strainer
Bowl SS Bolting
Headshaft Coupling (A Type) – optional

Version: 4.18P Customer: Date: 03-03-2015

PCS Pump & Process
41 Plymouth Street Fairfield, NJ 07004 (973) 575-7464 FAX: (973) 575-5938

June 1, 2015

Quote # 15-051

Vincent Maggio
Severn Trent

Subject: Replacement Fairbanks Nijhuis Vertical Turbine Pump
Sand Filter Influent
Carmel Sewer District # 2

PCS Pump and Process is pleased to offer the following Fairbanks Nijhuis proposal.

One (1) Fairbanks Nijhuis Model 10J Vertical Turbine Pump with the following:

- 10J Single Stage Pump Bowl Assembly
- Stainless Steel Impeller
- Dynamically Balanced
- 316 SS Impeller and Bowl Wear Rings
- Stainless Steel Basket Strainer
- 1800 RPM Operation
- 16.5" x 8" D Style Discharge Head with Cast Iron Sole Plate
- Bronze Packing Gland
- 6" Flanged Column and 416 SS Lineshafting – Length to be equivalent to existing pumps
- Non-Witnessed Certified Performance Test
- Non-Witnessed Hydrostatic Test
- Kop Coat Bitmuastic 300M Coating is applied to the following in Two (2) Coats per the original materials of construction:
    - Exterior of Bowl Assembly
    - Interior and Exterior of Column
    - Interior of Discharge Head

Price ..... **$ 18,325.00**

Notes:

- Pump has efficiency rating of 77.80 %.
- Design Conditions have been slightly reduced to 930 GPM @ 32' TDH to be non-overloading on the 10HP motor.
- Please advise if pump will be used in a potable water application. A potable water adder may apply.
- Motor is EXCLUDED from the above proposal and it is understood the existing motor will be reused.
- Installation and associated installation materials are excluded.
- Rehabilitation of any existing components is excluded.
- Field Wiring is excluded.

- Start Up and Training is excluded from this proposal.

Freight:

- FOB Factory and Included.

Delivery:

- Submittals within 4 -6 weeks after receipt and acceptance of order.
- Delivery within 14-16 weeks after submittal approval and written release to manufacture. Lead times are subject to factory load at time of order release.

Let me know if you have any questions on the included information.

Regards,

Chris Kramer
Sales Engineer
PCS Pump & Process
Cell: 201-574-5833
Office: 973-575-7464 Ext. 111
Email: CKramer@PCSPump.com

CC: Cassandra Rosina – Cell: (518) 698-8207, Email: CRosina@PCSPump.com

Severn Trent Services
1961 Route 6, Rear 3
Carmel, NY 10512
United States

T: +1 845 228 0460
F: +1 845 228 0465

www.severntrentservices.com

TOWN OF CARMEL

ENGINEERING

REQUEST FOR PURCHASE OR REPAIR

District : SD2

Date of Request: 12/01/15

Item requested: Sand filter influent pump

Purpose of item: supply water to sand filter

Estimated age of equipment to be replaced / repaired 7 years

Estimated life expectancy of new equipment / repair: 5-10

Labor cost for installation and or repair: $1000

Vendor # 1: Reiner Pump	Cost: $10,000
Vendor # 2: Sb Church Pump end and column only	Cost: $11,809
Vendor # 3: PCS	Cost: $18,325

Correspondence should be addressed to:
Severn Trent Environmental Services, Inc.

From: Maxwell,Mary Ann
To: Franzetti,Richard
Cc: Esteves,Donna
Subject: RE: 12-02-15 - CSD 2 Sand Filter Pump Requests.
Date: Wednesday, December 02, 2015 5:16:14 PM

Donna/Rich...there are sufficient funds in CSD #2 for this purchase but if it is an equipment purchase it should be charge to the .0020 line and then we could do a budget transfer.

Mary Ann

Mary Ann Maxwell
Town Comptroller
Town of Carmel
(845) 628-1500 ext 175
Fax (845) 628-7085
mam@ci.carmel.ny.us

From: Franzetti,Richard
Sent: Wednesday, December 02, 2015 2:24 PM
To: Maxwell,Mary Ann
Cc: Esteves,Donna
Subject: RE: 12-02-15 - CSD 2 Sand Filter Pump Requests.

Mary Ann,

Please confirm.

Richard J. Franzetti. P.E, BCEE, LEED AP
Town Engineer
60 McAlpin Avenue
Mahopac, New York 10541
Phone - (845) 628-1500 ext 181
Fax – (845) 628-7085
Cell – (914) 843-4704
rjf@ci.carmel.ny.us

This communication may be confidential and is intended for the sole use of the addressee(s). No use or reproduction of the information provided is permitted without the written consent of the Town of Carmel. If you are not the intended recipient, you should not copy, disclose or take any action in reliance on this communication. If you have received this communication in error, please notify the sender by reply e-mail and delete the message and any attached documents.

From: Esteves,Donna
Sent: Wednesday, December 02, 2015 2:23 PM
To: Franzetti,Richard
Cc: Maxwell,Mary Ann
Subject: RE: 12-02-15 - CSD 2 Sand Filter Pump Requests.

Yes there are sufficient funds in the .0040 line for this purchase.

From: Franzetti,Richard
Sent: Wednesday, December 02, 2015 2:20 PM
To: Esteves,Donna
Subject: 12-02-15 - CSD 2 Sand Filter Pump Requests.

Donna,

Is there sufficient budget to purchase two (2) sand filter pumps. Cost $10,000 each.

Richard J. Franzetti. P.E, BCEE, LEED AP
Town Engineer
60 McAlpin Avenue
Mahopac, New York 10541
Phone - (845) 628-1500 ext 181
Fax – (845) 628-7085
Cell – (914) 843-4704
rjf@ci.carmel.ny.us

This communication may be confidential and is intended for the sole use of the addressee(s). No use or reproduction of the information provided is permitted without the written consent of the Town of Carmel. If you are not the intended recipient, you should not copy, disclose or take any action in reliance on this communication. If you have received this communication in error, please notify the sender by reply e-mail and delete the message and any attached documents.

Richard J.Franzetti, P.E.
Town Engineer

(845) 628-1500
(845) 628-2087
Fax (845) 628-7085

#16

Office of the Town Engineer
60 McAlpin Avenue
Mahopac, New York 10541

MEMORANDUM

To: Carmel Town Board

From: Richard J. Franzetti P.E. Town Engineer (RJF)

Date: December 3, 2015

☑ Work Session 12/9/15

☐ Agenda

Re: Generator Replacement CWD#4 – Lake Baldwin Water District

Carmel Water District #4 (CWD 4) is equipped with standby power by means of a 100KW generator. The unit is a military surplus item obtained by the Town of Carmel in 2012. It is a unit from the 1980's and as such lacks modern controls such as voltage regulation, electronic governance and automatic transfer switch capability, which in short, means that the unit must be started manually and adjusted as necessary. A failure to make electrical output adjustments could result in damage to electrical components in the pump house.

Recently the fuel tank on the generator developed a leak. We were able to intervene quickly and contain the leak avoiding any contamination of the surrounding area which contains our production wells less than 100 feet away. We pumped the diesel fuel out of the tank to avoid any further leaking.

We requested Gentech, our current maintenance contractor for all standby generators, provide a quote to replace the leaking tank and at the same time upgrade the unit with modern controls. The quotes for that work are attached and total $8,438.20. Concurrently, we researched New York State Office of General Service state bid list. Better Power, Inc. is currently the New York State Low bidder for generators. We contacted Better Power and received the attached quote for a Generac 100KW Diesel Generator. The total cost including automatic transfer switch, diagnostic software upgrades, extended warranty and shipment to our location is $34,701.00. We estimate the cost of installation to be approximately $5,000.00 including unit placement and wiring. The total estimate is therefore ~ $40,000.00. Once authorized, there is approximately an eight (8) week lead time for delivery. It should be noted that the costs for installation are included in the 2016 budget.

We reviewed our recent contract from 2011 for generator installations in various districts. Under that contract we paid $49,840.00 for the purchase and installation of an equivalent 100KW generator. That contract was let as a public works contract which is different than a direct purchase of goods under the OGS state bid system. As you can see, the realized savings amounts to about $10,000.00, which we believe is a sensible model for generator replacements going forward.[1]

This Department spoke with the Town of Carmel Comptroller and she indicated that there are sufficient funds in the CWD 4 budget for the purchase of the generator.

Based upon the above we recommend that the Board approve the purchase of the generator from Better Power for $34,701.00. .

[1] The Town of Carmel has 42 standby generators, many of which are part of the 1997 CSD# 2 expansion, approaching their serviceable life span.

QUOTE

GENTECH LTD
3017 US RT 9W
NEW WINDSOR NY 12553
Phone: 845-568-0500
Fax: 845-568-3073

DATE	QUOTE	CUST #
12/1/2015	0000018172	0000453

BILL TO:

TOWN OF CARMEL
TOWN HALL
60 MC ALPIN AVENUE
MAHOPAC NY 10541

SHIP TO:

TOWN OF CARMEL-KENNARD AVE PUMP
SITE #30 WD #3
KENNARD AVENUE
MAHOPAC NY

P.O. NUMBER	TERMS	SALES PERSON
	2/YR 5995	

QUAN		DESCRIPTION	PRICE EACH	AMOUNT
		AS PER YOUR REQUEST, WE ARE PLEASED TO QUOTE THE FOLLOWING: INSTALL UPDATED/MODERN CONTROLS ON UNIT, AS WELL AS NEW VOLTAGE REGULATION SYSTEM, AND UPDATED ELECTRONIC GOVERNOR AND CONTROLLER.		
1.00	ADC225S-24	ACTUATOR ASSY	581.90	581.90
1.00	ESD5500E	SPEED CONTROL UNIT	452.90	452.90
1.00	MSP675	MAG PICK UP	85.50	85.50
1.00	P9E020X1X310	CONTROLLER, DEAP SEA	1,979.90	1,979.90
1.00	DESCR	UPDATED VOLTAGE REGULATION SYSTEM	1,000.00	1,000.00
1.00	DESCR	CRANE FEE- INCLUDES REMOVAL AND INSTALLATION OF GENERATOR	595.00	595.00
5.00	LABOR	HOURS- DISCONNECT/ REMOVAL OF GENERATOR TO BE BROUGHT TO GENTECH FOR REPAIRS.	99.00	495.00
5.00	HELPER	HOURS- DISCONNECT/ REMOVAL OF GENERATOR TO BE BROUGHT TO GENTECH FOR REPAIRS.	47.50	237.50
10.00	LABOR	HOURS- TO INSTALL UPDATED CONTROL PANEL, GOVERNOR, AND VOLTAGE REGULATION SYSTEM	99.00	990.00
5.00	LABOR	HOURS- TO INSTALL GENERATOR BACK ON SITE AFTER UPGRADES/REPAIRS HAVE BEEN COMPLETED.	99.00	495.00
5.00	HELPER	HOURS- TO INSTALL GENERATOR BACK ON SITE AFTER UPGRADES/REPAIRS HAVE BEEN COMPLETED.	47.50	237.50
1.00	SHIP	SHIPPING AND HANDLING (MULTIPLE VENDORS)	100.00	100.00
		THANK YOU FOR YOUR TIME AND CONSIDERATION. IF YOU WOULD LIKE TO ACCEPT, PLEASE SIGN AND FAX THIS FORM BACK TO US AT (845) 568-3073 OR EMAIL TO JESAYEGH@GENTECHLTD.COM		
		TOTAL		**$7,250.20**

APPROVAL SIGNATURE _____

QUOTE

3017 US RT 9W
New Windsor NY 12553
Phone: 845-568-0500
Fax: 845-568-3073

DATE	QUOTE	CUST #
10/27/2015	0000017367	0000453

BILL TO:

TOWN OF CARMEL
TOWN HALL
60 MC ALPIN AVENUE
MAHOPAC NY 10541

SHIP TO:

TOWN OF CARMEL-KENNARD AVE PUMP
SITE #30 ~~WD #3~~ WD4
KENNARD AVENUE
MAHOPAC NY

P.O. NUMBER	TERMS	SALES PERSON
	2/YR 5995	

QUAN		DESCRIPTION	PRICE EACH	AMOUNT
		AS PER OUR DISPATCH # 65834, AND INVOICE # 0000017255, WE ARE PLEASED TO QUOTE THE FOLLOWING:		
6.00	LABOR	HOURS- REMOVAL OF FUEL TANK TO BE BROUGHT BACK TO THE SHOP AND TESTED FOR LEAKS (INCLUDES TESTING).	99.00	594.00
6.00	LABOR	HOURS- TWO TECHNICIANS REQUIRED. ADDITIONAL QUOTE WILL BE SENT AFTER TECHNICIANS DETERMINE THE STATUS OF THE FUEL TANK.	99.00	594.00
		THANK YOU FOR YOUR TIME AND CONSIDERATION. IF YOU WOULD LIKE TO ACCEPT, PLEASE SIGN AND FAX THIS FORM BACK TO US AT (845) 568-3073 OR EMAIL TO JESAYEGH@GENTECHLTD.COM		
		New [illegible]		
		TOTAL		$1,188.00

APPROVAL SIGNATURE _____

www.BetterPowerOnline.com
508 White Spruce Blvd., Rochester, NY 14623
Phone: **800-475-1321** / fax: 800-475-4448
support@betterpoweronline.com

Dave Skiff, Manager of Government Supply Dave@BetterPowerOnline.com

11-04-2015

Mr. Robert Vara, Engineering Projects Coordinator
Town of Carmel,
60 McAlpin Avenue
Mahopac, NY 10541
Phone: 845-628-1500 X-183
rjv2@ci.carmel.ny.us

RE: NY State H.I.R.E. Contract Generator for the Town of Carmel, 100kW, 120/208V, three phase, SD Industrial Diesel with Heavy Duty Maximum Performance Package (HDMPP)

Mr. Vara,

This Pricing Confirmation from H.I.R.E. Contract # PC66786 is for a 100kW, 120/208V, three phase, SD Industrial Diesel and 400 Amp, NEMA-3R Automatic Transfer Switch for the Town of Carmel, Water District.

H.I.R.E. stands for (**Hazardous Incident Response Equipment**). *See the Contract Reference below.*

Please take 3 minutes to watch our **New Video** on the Benefits of Purchasing from State Contract:
http://www.betterpower.us/purchasing-generators-on-state-contract

Let me know if you will require a Low Sound Enclosure for the generator or a different size transfer switch.

SD Industrial Diesel

Here is your Pricing Confirmation which includes:

- Freight to your location
- Factory Authorized Startup
- Life Safety Equipped per NFPA–110, Level-1
- Training for Staff at your Location
- EPA Compliant
- 6.7L engine running at 1800 RPM's
- Standard Weather Enclosure, Steel *(Low Sound Enclosures are available as an option)*
- Standard 220 gallon Double Wall Fuel Tank providing 30 hours of runtime at full load
- Remote Annunciator Panel with 21 indicator lights and 8 function relay
- 8 Position Load Center
- Block/Coolant Heater
- Battery - Battery Warmer
- Output: 347 Amps
- Many more features are listed below in the Heavy Duty Maximum Performance Package (HDMPP).

EXECUTIVE SUMMARY – Suitable for use in your PO

$ 29,955 Contract Item #GENSD100G1S, 100kW, SD Diesel Generator: 120/208V, three phase, Steel, SD Industrial Diesel Series Model SD0100GG176.7D18HPYY3H1, (details page-5).

$ 3,594 Contract Item #GEN556S, 400 Amp Automatic Transfer Switch: 120/208V, three phase, GTS Series, Generac Model # GTS040W-3G2LDNCNF1, 3-pole.
Includes -- NEMA-3R enclosure for indoor or outdoor mounting (details page-5).

$ 33,549 Sub-total Cost for 100kW Generator and 400Amp Automatic Transfer Switch

Recommended Options:

GenLink Software System - for Notification, Remote Control, and Remote Troubleshooting from any PC (see description below).

$ 491 Contract Item #GEN9062CS, GenLink II DCP Software Kit #0E9062CSRVF1.
Includes laptop connection Cable, Software and Instructions.

$ 661 Contract, Item #GEN1003S, Extended Limited Warranty: 5-year Comprehensive
Replaces the included 2-year Basic Warranty.
Note: *Warranty Activation Requires Generator Installation & Startup within one year of Shipment*

$ 34,701 TOTAL Cost of Generator, Switch and Recommended Options

Prices shown are valid for 30 days please contact us to reconfirm pricing after 30 days.
****

Pricing includes freight to your facility meeting the "Shipping Address Requirements" section below.
Please Note: Unloading, rigging, storage, and installation are not included.
Installation of Options and Additional Services: may be done by the Startup company at additional charge, or by the owner's contractor. (Please note that Better Power, Inc. is an Electrical Wholesale Distributer and does not do installations nor perform maintenance or repairs on the generators, switches or accessories we sell.)

National Code: The generators and transfer switches we supply meet national code requirements. If you have additional state or local code requirements, be sure to check with us for extra charges to meet those requirements.
Electrical Inspector: Please consult your Electrical Inspector regarding electrical questions, since we at BPI are not electricians.
Contract and Non-Contract items will be invoiced separately.
Management Overview is at the end of this letter.
Additional information is available on our website that is set up for the Contract, www.BetterPower.us

CONTRACT REFERENCE:

View the H.I.R.E. Contract generator price list for this Multiple Award Contract at this link:
Please Note: The index is located and begins on page-38 of this 92 page document:
http://www.ogs.ny.gov/purchase/spg/pdfdocs/3823222872pl_BetterPower.pdf#page=38

This is the path to our price listing from the awards main menu on the OGS website.
1. Click on: http://www.ogs.state.ny.us/purchase/spg/awards/3823222872CAN.HTM
2. Then click on "Pricing Information"
3. Then click on "Better Power".
4. This is a **H.I.R.E. Contract: (Hazardous Incident Response Equipment) Contract #PC66786 (Group 38232, Award 22872) (Effective June 1, 2015).** For your reference, this Contract is maintained by New York State.
Classification Code(s): 41, 42, 43, 46, 85, 92.
Description: The purpose of these Contracts is to provide Authorized Users **(including other participating states)** with a means of acquiring various types of *Hazardous Incident Response Equipment* as per, but not limited to, the ***Department of Homeland Security*** (DHS) Authorized Equipment List (AEL).
5. NYS Vendor # 1000008177 Small Business Certification #P0317675 **Federal ID #16-1422551** –
Better Power, Inc., a NY State "C" corporation. Company Cage Code: 06QX8 DUNS number: 19-598-5916
SIC Code 3621 **NAICS Codes: 335312 – Power Generator Manufacturing,** Electrical Apparatus and Equipment, Wiring Supplies, and Related Equipment Merchant Wholesalers

LEAD TIME

We will give you the factory's estimated ship date after they process your order. Factory lead times are very approximate; often it ships sooner, but sometimes there are delays. Shipment dates cannot be specified and are not guaranteed, but the factory will ship each item as soon as it is ready. We will ask the trucker to call you 24 hours ahead of delivery. Storage is not included, so please be flexible in receiving the shipment.

STEP BY STEP PURCHASING GUIDE for Multi-State Contract customers

1. Send us a PO. If you do not use POs, send us a Letter Of Commitment.
2. Please - Call us by phone if you do not hear from us within 48 hours of faxing or emailing us a PO to make sure we have received it. (PO's sent electronically and not reaching the intended destination, can cause lengthy delays.)
3. **Frequently the items requested will ship at different times. If so, we will need to invoice you at the time of receipt of each item. Please indicate whether you will accept multiple invoices on (one) Purchase Order, or whether you will issue multiple POs, one for each major item.**
4. Copy the above list of equipment and services, or refer to it in your PO or Letter to confirm what you are buying or not.
5. Reference the H.I.R.E. **Contract #PC66786**, if you are buying on Contract.
6. **NYS Vendor # 1000008177 (Statewide Financial System - SFS)**
7. **Please be sure to note on your PO: "This is a non-cancelable order, and a non-returnable final sale".** Rely on the factory's Limited Warranty in the case of any problems.
8. Because we are a small business, we would appreciate if you would **assure funds are sequestered, encumbered or otherwise set aside** so they cannot be diverted by other agencies.

9. **"Late Payment.** Timeliness of payment and any interest to be paid to Contractor for late payment shall be governed by Article 11-A of the State Finance Law to the extent required by law." Taken from page-6 of Terms and Conditions of this H.I.R.E. Contract.
10. As a Small Business (Certification #P0317675) we appreciate whatever you can do to expedite payment of your PO – on your PO, please indicate how and when you will pay. Payment is due as soon as you accept the Generator and associated equipment as appearing to be in good condition. **Since we are supplying equipment only, not installation, our equipment invoice is due when you receive the equipment, without waiting for installation; and there is no retainage of any kind. We also accept most Purchasing Cards, which** will not be charged until each item is shipped or the service performed.
11. Indicate the Ship-To address, phone number, email and contact person.
12. Make sure that your receiving personnel will inspect the shipment for damage. If there is any damage, they MUST have the trucker sign on your copy of the paperwork that the shipment was delivered "damaged". Otherwise, the trucker may deny the claim for damages. Ideally, receiving personnel would also take a digital photo (which can be emailed) of any damage to facilitate the claim. Please call us if there is any damage.
13. You are still protected by the factory's Limited Warranty. If you discover any problem at or after installation, please call us so we can help.
14. See your Owner's Manual for the required maintenance to keep the Warranty in force.

SHIPPING ADDRESS REQUIREMENTS, to avoid the trucker's re-delivery charges:

-- **Transportation is included** to the 48 contiguous states, to those locations normally served by tractor trailer or flatbed via land only. **Freight** to your facility is included to the first or nearest drop-off point and also applies to shipments going to off shore locations. Additional charges for shipping and handling after the first drop off point are at the customer's expense. Unloading, rigging, storage, and installation are the responsibility of the customer and are not included.
-- **Please supply the shipping address**. If the delivery point is changed later, there will be a change-of-address charge and possibly a re-delivery charge. If the generator cannot be unloaded at the time of delivery, there will be a re-delivery charge.
-- **Installation Manuals.** Genset Owner's Manuals are individually assembled to reflect the exact configuration of each unit and are placed inside the generator enclosure prior to shipping.

Methods of unloading the delivery truck
The included prepaid standard shipping for most Generators is in an enclosed truck, such as a tractor trailer. The Generators are loaded lengthwise and must be forked from the end. *Unloading and rigging are the responsibility of the customer.*
-- **Loading Dock Unloading:** Using a loading dock is usually the easiest way to unload the Generator. The loading dock can belong to you, your contractor, your rigging company, or to a helpful local business. For Commercial Gaseous Generators larger than 25 kW, Industrial Gaseous and Diesel Generators loaded in an enclosed truck, you will need to supply a fork lift truck with fork extensions to unload the Generator because it will be loaded lengthwise.
-- **Parking Lot Unloading:** If the shipping address is a parking lot, you will need to supply the unloading equipment, such as a fork lift truck with fork extensions, or lifting equipment that can get the Generator out of the enclosed truck. . (Larger Generators will arrive on a flatbed trailer).
-- **Lifting Precautions:** If you want to lift the Generator with your equipment, you will need straps and a spreader bar to avoid deforming the sheet-metal housing.
-- **Liftgate Delivery:** Gaseous Generators (powered by natural gas or propane) of 22 kW and smaller can be delivered to your paved parking lot or driveway by a hydraulic liftgate on the back of a 53-foot tractor trailer IF the paving is an easily accessible commercial location. There is no charge for this service, but **"Liftgate Delivery" must be specified on your PO.** Liftgate Delivery is not available for diesel Generators or for Generators larger than 22 kW, and is always subject to factory approval.
-- **Alternate Shipping by Flatbed Truck:** When not required by the factory (for the largest generators), delivery by open flatbed truck is usually available at extra cost, typically $1,000-$5,000 (request a quote). "Flatbed delivery" must be requested when you place your order, and is subject to factory approval.

-- **Transwrap Services:** An optional shrink wrap (similar to boat wrap) is recommended and available at extra cost (non-Contract) for generators that are shipped on a Flatbed Truck exposed to the outside elements. This includes most diesels as well as gaseous generators above 200kW. Protects from tarp damage, road salt, and grime -- will reduce unwarrantable damage during transportation. Also recommended if you are storing your generator for a period of time prior to installation.

Contact Information:
-- Please give us the phone number and name of the person for the trucker to call the day before delivery, to be sure that your personnel are ready to receive the shipment. Include an email address for delivery status updates.
-- An authorized person must be available during normal business hours to inspect & sign for the Generator.

DETAILS:

100kW SD Industrial Diesel Generator - Generac Industrial Generators are custom configured to meet the specific requirements of each application. Heavy duty engines have proven their performance and reliability in industrial applications. (See the attached HDMPP)

Spec Sheet: http://gens.lccdn.com/generaccorporate/media/library/content/all-products/generators/industrial-generators/diesel/0k5093-a-sd100-6-7l.pdf?ext=.pdf
Specifications are subject to change without notice.
Note: *Warranty Activation Requires Generator Installation & Startup within one year of Shipment.*

Multiple Transfer Switches: There is no limit on the number of open transition, closed transition or bypass isolation switches that can be used within a system. Only one soft load switch can be used.

Life Safety Equipped. Generac Industrial Generators include the equipment necessary, when properly installed, to qualify for the stringent NFPA 110, Level 1, Life Safety applications of the NFPA National Fire Protection Association (see details below).

Life Safety may be required for the following applications, to comply with Code per NFPA-110 (check with your AHJ Authority Having Jurisdiction, such as the local Building Inspector):
-Elevator
-Oxygen or life support equipment that requires electricity
-Fire pump/sprinkler system pump
-Industrial processes where current interruption would produce serious life safety or health hazards
-Fire detection and alarm systems
-Building over 75 feet tall
-Public Safety communications systems
-Health care loads greater than 120kW
-Essential ventilating and smoke removal systems
-Life safety illumination (i.e. lighting allowing safe egress or exit signs without battery backup)
-Facility used as an Emergency Shelter (check with your AHJ and your shelter's sponsor, such as the Red Cross).

GTS Transfer Switches:

100-400A GTS -- Automatic Transfer Switches
Spec Sheet: http://gens.lccdn.com/GeneracCorporate/media/Library/content/all-products/transfer-switches/business-transfer-switches/094700000S-A-ATS-100-400-Amp-600-VAC.pdf
Specifications are subject to change without notice.

Generac is the only manufacturer of open transition switches to incorporate the two most common switching methods (inphase and time delay neutral) into a single ATS. Generac's inphase monitor provides safe, fast (160 msec) transfers between two live voltage sources when the source voltages are aligned (within 20Â°). If voltages are not

inphase within an appropriate time, the system will automatically revert to the time delay neutral transfer. If the inphase function is disabled, our GTS switches utilize a delay in neutral transfer that allows load voltage to decay to a safe level before switching sources.

Generac GTS transfer switches feature status lights that indicate switch position and generator status, a programmable weekly exerciser that can be user-configured to transfer on exercise, independent voltage pickup and dropout adjustments and utility monitoring to protect against utility single phase conditions. Our front access test mode switch allows the entire standby system to be tested in either a normal or fast test mode.

WITHSTAND RATING for the Transfer Switch – The Simplest Solution:

1. Call the electric utility and get the Withstand Rating for the Service Entrance of the building.
2. If your Switch needs a higher Withstand Rating, install a fuse block or a fused disconnect before the Transfer Switch. Click for more details: http://www.betterpower.us/withstand-rating

GENLINK SOFTWARE SYSTEM for Notification, Remote Control & Troubleshooting

http://www.generac.com/for-business/business-standby-products/remote-monitoring

-- Rapid response to trouble calls, without waiting for an on-site visit to be scheduled.
-- Allows remote troubleshooting by factory techs or installer and monitoring by the owner via
- Direct Serial Connection
- Phone Line or
- Ethernet Connection

-- May pay for itself with the first avoided on-site visit
-- Alarm notification for cell phones, pagers, and remote PCs
-- Generator usage data, alarm history, and predictive maintenance reminders
-- Off-site monitoring, controlling, and troubleshooting of multiple Generator systems from any PC
-- Easier on-site monitoring, controlling, and troubleshooting of the Generator
-- Dealer can remotely diagnose problems, modify generator configurations and parameters then dispatch a service truck with necessary parts to quickly correct the problem

GenLink Software Kit - Item #0E9062CSRVF1
-- Includes software and instructions
-- Includes a laptop connection Cable for on-site work

HEAVY DUTY MAXIMUM PERFORMANCE PACKAGE (HDMPP) – SD Industrial Models

SD Industrial Series generators are designed for the heaviest-duty, highest-reliability applications, including Life Safety. Custom equipment changes can be made. EPA Compliant.

The Contract Price includes a "Heavy-Duty Maximum Performance Package" to make sure that you are able to operate and to accomplish your mission, even in an emergency that takes out utility power.
The Package consists of major upgrades and additions to Generac's base model. Even Generac's base model comes with a long list of equipment that may be optional on other brands.
If these items had to be purchased and installed in the after-market, when the Contract User discovered the hard way that he needed them, it would be far more expensive. And in the meantime, the User would be lacking the additional protection.

The included Package comes with ALL of the following items:

Life Safety Equipped. Includes the equipment necessary, when properly installed, to qualify for the stringent NFPA 110 Level 1 Life Safety applications of the NFPA National Fire Protection Association.

Freight to your facility per the section "Shipping Address Requirements" above. Freight is included to the first or nearest drop-off point and also applies to shipments going to off shore locations. Additional charges for shipping and handling after the first drop off point are at the customer's expense. Unloading, rigging, storage, and installation are not included.

Startup. When the installation is complete, a technician visits the location for several hours to verify that the installation was done according to factory requirements, to test many parameters, to adjust them for best performance, and to validate the Warranty.

Training. A factory-authorized technician will **Train Staff** by demonstrating the proper operation and maintenance of the generator during the Startup visit. **Staff learn** by observing and asking questions of the technician during the demonstration.

Outdoor Housing, weather-protective, lockable, finished with the highly-durable, RhinoCoat™ finish system for superior protection against the elements. Available with Optional Sound Attenuation.

Superior Paint. Our textured, powder coat paint process provides consistent coverage and better bonding to seams and exposed edges providing durability and a long-lasting, tough finish.

Digital H Control Panel: Offers quick access and simultaneous monitoring of key generator functions with LCD display. Integrated transfer switch controller for GTS or HTS or PSTS transfer switch. RS232 and RS485 ports, CANbus addressable, allowing optional remote operation and troubleshooting via laptop or PC with optional modem, cable, and GenLink Software Kit.

Digital Control Panel with LCD display, state-of-the-art programmable H-100, with RS232 and CANbus ports, which allows optional Remote Operation via laptop or PC with optional modem or cable and GenLink Software Kit.

8 Position Load Center is a 125A unit-mounted distribution panel available for all units that utilize H-100, PM-GC or PM-PC control systems. This main lug load center includes all of the circuit breakers required for the coolant heater, battery charger, and other factory-installed optional AC loads within the generator set, and serves as a convenient connection point for the customer's utility feed for these AC loads. All breakers are labeled for specific load circuits.

Remote Annunciator Panel with 21 indicator lights & 8 function relay. (Although the 3-light and 5-light panels meet the technicality of being Remote Annunciator Panels, they are much less useful.) This panel mounts in the office of the manager in charge of the generator, "announcing" or telling him in real time whether everything is functioning correctly or if something needs attention. Required to meet NFPA-110. Surface mounting will be supplied unless recessed mounting is specified.

Spec Sheet: http://www.betterpower.us/s/annunciator-spec-sheet-0604160SSD-dated-april-2014.pdf

Annunciator Manual: http://www.betterpower.us/s/remote-annunciator-manual-09-14-09-0G6960.pdf

Engine meets the pollution standards of EPA and is EPA Certified.

Engine-Run Relay, factory-installed. When the engine is running, this allows the operation of a safety alarm or indicator, as well as the operation of other equipment, such as cooling louvers.

Fuel Tank for approximately 24-hour run time (usually 24" deep). Includes the sub-base fuel tank mounted under the generator, and also includes the emergency vent that is required for safety. In addition, these are UL142-Listed double-wall fuel tanks for extra protection against the leaks that could trigger a HazMat cleanup.

Fuel-level sender to show how much fuel is in the tank.

Critical-Grade Muffler for the quietest operation -- much quieter than the Industrial grade or even the Residential grade -- installed within the housing on 400kW and smaller units.

Starting Battery, high-capacity, factory-installed.

Battery Charger, factory-installed high-capacity dual-rate. This uses utility power to keep the battery charged even when the generator is not running. Other generators depend on the generator's own alternator to charge it when the generator is running, like your car battery. But unlike a car battery, the generator battery is constantly using power to monitor its functions and readiness, so it is safer to keep the battery charge topped off with the separate charger.

Battery Heater Blanket, recommended when the ambient temperature goes below 30 F. When used yearly maintenance and/or replacement of the battery will be required.

Main Line Circuit Breaker, factory-installed and UL-Listed. This stops the wires from overheating before they can cause a fire or other safety hazard, and is required to meet UL2200.

Block/Coolant Heater keeps the diesel fuel flowing easily in the winter so that the starting motor is able to start the generator even if the temperature goes below minus 20 degrees.

Closed Recovery Cooling System. This closed, pressurized system virtually eliminates the introduction of air into the cooling system. Rust and fluid acidity are minimized, resulting in longer engine life.
Isochronous Governor. Constant speed control provides faster response to block loads and a more consistent output frequency. All generators utilizing PowerManager® control systems feature an isochronous governor.
Vibration Isolation. Standard vibration isolators virtually eliminate transmission of vibration from the unit to the mounting surface.
Automatic Alarms & Shutdowns. Generator functions are constantly monitored through a protective system that features solid state circuitry for reliability and long life. NFPA 110 required warnings and alarms provide alerts for a variety of safety and operational concerns. The system automatically shuts down in response to certain critical conditions such as high engine temperature, low coolant level, etc. All generators utilizing PowerManager® control systems meet NFPA 110 requirements for warnings, alarms and alerts.
Advanced Wire Harness Design with Waterproof Connectors. Our wire harness design assures reliable, repeatable interconnection between circuit components. Special sealed connectors protect against moisture, dust and environmental damage.
Generac-Manufactured Alternators. Our revolving field alternators are fully-insulated and self-ventilating. They feature higher temperature Class H insulation, but are designed to operate at lower, Class F temperature levels for longer life. Oversized alternators are available on many models for additional motor starting capacity.
Solid-State Sensing and Starting Control. Provides the ultimate in engine protection. The magnetic pickup senses overspeed, automatically shuts down the engine, disconnects the starter motor and prevents re-engagement. The system also provides cyclic cranking for improved starting reliability and cranking termination for starter motor protection.
Solid-State, Frequency Compensated Voltage Regulation (V/F). Provides fast, optimized response to changing load conditions. Maximum motor starting capability is assured by electronically torque-matching the surge loads to the engine.
Permanent Magnet Excitation (PME). Provides sustained short circuit current for breaker coordination. Increases motor starting capabilities and enhances performance when load-induced harmonics are present. Standard on 150 kW and larger. Optional on smaller gensets.
120V GFCI & 240V Outlet
Easy To Service - All service points are located at the perimeter of the frame for easy access.
UL-2200-Listed - All Generac standby generators are UL 2200 listed and our transfer switches are UL 1008 listed. UL listing verifies the kilowatt ratings of our generators, and is your assurance that Generac standby systems meet the highest safety, endurance, and performance standards.
Made in USA - Generac generators are made in the United States by Generac Power Systems Inc. We design and manufacture all of the major components including the alternators, controls and enclosures. This unprecedented degree of control ensures that Generac products are built to the highest standards for quality, reliability and durability.
Specification Sheet lists additional items included. Specifications subject to change without notice.

MANAGEMENT OVERVIEW

Just imagine trying to do your job in an emergency situation -- when your work is desperately needed, but your electricity went out, possibly as part of the emergency.

An automatic, permanently-installed Generator for your facility is called an Emergency Standby Generator. During an electricity outage, it automatically supplies electricity for as long as you need it -- for weeks, if necessary -- but it is not intended to replace the utility permanently. You also need an ATS or Automatic Transfer Switch, which is the part that switches back and forth from utility power to Generator power as needed.

Without a Generator:

- Staff would not have lighting, heat, air conditioning, water, sewage.
- Failed communications – phones, internet, TV – could lead to mission failure.
- Overheating could damage computers and electronic equipment.
- Electronic valves and controls could fail, resulting in damage.

- Inoperable sump pumps could allow flooding and ruined equipment.
- Inoperable refrigerators and freezers could allow expensive medicines and food to spoil.
- Water pipes could freeze and burst in a prolonged winter outage.
- The security system could stop protecting your facility when its battery dies.

The H.I.R.E. Contract makes it much easier to get your Generator:

- In many cases, you no longer have to spend your time on the hassle, delays, and expense of the bid process.
- You may not need to hire an engineering firm to prepare bid specifications, or to pay for lawyers or advertising.
- The State has already done the shopping, negotiated the pricing, and checked references for you.
- In many states, all levels and types of government operations and even non-profits can use the Contract.

Hundreds of Generators are included on this H.I.R.E. Contract:

- Large permanently-mounted automatic "Emergency Standby" Generators, to run large or small buildings.
- Mobile (towable) Generators to bring power where most needed in an emergency.
- Large Mobile Containerized Generators up to 2 megawatts.
- Mobile Light Towers which can fully illuminate up to seven acres in all kinds of situations.
- Portable Generators to use at emergency sites.
- Generators can be fueled by natural gas, propane, diesel fuel, or gasoline.
- Sizes available from 800 watts to 9,000,000 plus watts.

Questions? Please call or email me with any questions or concerns.

We look forward to serving you!

Thank you – Dave

Dave Skiff | Manager, Government Supply
Better Power Inc.
Government: www.betterpower.us
508 White Spruce Blvd. | Rochester, NY 14623
Tel: 1-585-475-1321 or **1-800-475-1321**
Fax: 1-585-424-1190 or **1-800-475-4448**
dave@betterpoweronline.com

NYS Vendor # 1000008177 Small Business Certification #P0317675 Federal ID #16-1422551 – Better Power, Inc., a NY State "C" corporation. Company Cage Code: 06QX8 DUNS number: 19-598-5916 SIC Code 3621 NAICS Codes: 335312 – Power Generator Manufacturing, Electrical Apparatus and Equipment, Wiring Supplies, and Related Equipment Merchant Wholesalers

"Better Power, one of America's largest wholesalers of Generators, is a Generac Powerhouse Distributor!"

One of only 60 in the U.S.

From: Maxwell,Mary Ann
To: Franzetti,Richard
Subject: RE: 12-2-15 - CWD 4 Generator purchase.
Date: Wednesday, December 02, 2015 5:13:51 PM

Yes you're good...as long as no unforeseen expenses occur. This budget transfer utilizes all available expense lines.

Mary Ann Maxwell
Town Comptroller
Town of Carmel
(845) 628-1500 ext 175
Fax (845) 628-7085
mam@ci.carmel.ny.us

From: Franzetti,Richard
Sent: Wednesday, December 02, 2015 2:25 PM
To: Maxwell,Mary Ann
Subject: RE: 12-2-15 - CWD 4 Generator purchase.

So am I good to go?

Richard J. Franzetti, P.E, BCEE, LEED AP
Town Engineer
60 McAlpin Avenue
Mahopac, New York 10541
Phone - (845) 628-1500 ext 181
Fax – (845) 628-7085
Cell – (914) 843-4704
rjf@ci.carmel.ny.us

This communication may be confidential and is intended for the sole use of the addressee(s). No use or reproduction of the information provided is permitted without the written consent of the Town of Carmel. If you are not the intended recipient, you should not copy, disclose or take any action in reliance on this communication. If you have received this communication in error, please notify the sender by reply e-mail and delete the message and any attached documents.

From: Maxwell,Mary Ann
Sent: Wednesday, December 02, 2015 1:53 PM
To: Franzetti,Richard
Subject: RE: 12-2-15 - CWD 4 Generator purchase.

Rich,

I reviewed the YTD expenses for CWD #4 and in order to fund this purchase we would have to do a budget revision transferring approximately $28,000 from other expense lines and the remainder $6,701 would have to come from the unreserved fund balance.

Mary Ann

Mary Ann Maxwell
Town Comptroller
Town of Carmel
(845) 628-1500 ext 175
Fax (845) 628-7085
mam@ci.carmel.ny.us

From: Franzetti,Richard
Sent: Wednesday, December 02, 2015 12:22 PM
To: Maxwell,Mary Ann
Subject: 12-2-15 - CWD 4 Generator purchase.

Mary Ann,

Are there sufficient funds (34,701.00) for the purchase of a new generator at CWD 4?

Thanks

Richard J. Franzetti. P.E, BCEE, LEED AP
Town Engineer
60 McAlpin Avenue
Mahopac, New York 10541
Phone - (845) 628-1500 ext 181
Fax – (845) 628-7085
Cell – (914) 843-4704
rjf@ci.carmel.ny.us

This communication may be confidential and is intended for the sole use of the addressee(s). No use or reproduction of the information provided is permitted without the written consent of the Town of Carmel. If you are not the intended recipient, you should not copy, disclose or take any action in reliance on this communication. If you have received this communication in error, please notify the sender by reply e-mail and delete the message and any attached documents.

tcs/email Supervisor ✓ Town Bd ✓ Legal Counsel ✓ 11/25/15

THE PUTNAM COUNTY LEGISLATURE

40 Gleneida Avenue
Carmel, New York 10512
(845) 808-1020 Fax (845) 808-1933

Carl L. Albano *Chairman*
Ginny Nacerino *Deputy Chair*
Diane Schonfeld *Clerk*
Clement Van Ross *Counsel*

Barbara Scuccimarra	Dist. 1
William Gouldman	Dist. 2
Toni E. Addonizio	Dist. 3
Ginny Nacerino	Dist. 4
Carl L. Albano	Dist. 5
Roger S. Gross	Dist. 6
Joseph Castellano	Dist. 7
Dini LoBue	Dist. 8
Kevin Wright	Dist. 9

#17

November 24, 2015

Supervisor Kenneth Schmitt
Town of Carmel
60 McAlpin Avenue
Mahopac, NY 10541

☑ Work Session 12/9/15

☐ Agenda

Dear Supervisor Schmitt,

The Putnam County Rules, Enactments, & Intergovernmental Relations Committee held a meeting on September 17, 2015 where information regarding a County-wide Taxi & Limousine Commission was explored. Present at this meeting were President of the Putnam County Chambers of Commerce and member of the Putnam County Transportation Advisory Council, Bill Nulk and Owner of Carmel Taxi, Ruth Ayala-Quezada who provided a first-hand interpretation of how beneficial a County-wide Commission would be.

Currently, under New York State Law the Towns and Villages are authorized to regulate taxis and limousines, the County cannot. There is no County-wide regulation on who can provide public transportation and companies are not required to perform background checks on their drivers. Ms. Ayala-Quezada informed the Committee that people often go to the train stations and put a simple "Taxi" sign in their windshield and transport passengers getting off the trains to their destination. She alerted the Committee that these unscrupulous taxi services often charge the customer a very high rate because there is no regulation. Also, in regards to consumer safety, a County-wide Commission would regulate driver's licenses and require photo ID and citizenship. Background checks would be performed, which would provide insight to any traffic infractions or criminal infractions that may prohibit the operation of a vehicle. Safety and maintenance checks of the vehicles would be performed as well, further increasing the protection of the customers. This Commission would also provide reciprocity between Putnam County and Westchester County.

The Committee was in agreement that a County-wide Commission would provide immense benefits to both the operators of taxi and limousine services and the

RECEIVED
NOV 25 2015
SUPERVISOR'S OFFICE
TOWN OF CARMEL

consumers within Putnam County. In order to create a County-wide Taxi & Limousine Commission, Putnam County must be granted authorization by the New York State Legislature. Authority is unlikely to be granted unless the Towns and Villages are willing to accede their authority to the County. Therefore, if the Town of Carmel is in agreement that this County-wide regulation is needed, I, as Chairwoman of the Rules, Enactments, & Intergovernmental Relations Committee respectfully request that a letter granting authority for the County to move forward and request permission from New York State be sent to the Legislative Office as soon as possible and no later than January 31, 2016.

Thank you for your attention to this important matter. If you have any questions or concerns, please do not hesitate to contact the Legislative Office.

Sincerely,

Toni Addonizio/d

Toni Addonizio
Chairwoman, Rules, Enactments, & Intergovernmental Relations Committee
Legislator, District #3

/bg

#18

KENNETH SCHMITT
Town Supervisor

FRANK D. LOMBARDI
Town Councilman
Deputy Supervisor

JOHN D. LUPINACCI
Town Councilman
SUZANNE MC DONOUGH
Town Councilwoman
JONATHAN SCHNEIDER
Town Councilman

TOWN OF CARMEL

TOWN HALL

60 McAlpin Avenue
Mahopac, New York 10541
Tel. (845) 628-1500 • Fax (845) 628-6836
www.carmelny.org

ANN SPOFFORD
Town Clerk

KATHLEEN KRAUS
Receiver of Taxes

MICHAEL SIMONE
Superintendent of Highways
Tel. (845) 628-7474

December 3, 2015

ws 12-9-15

Sheriff Donald B. Smith
Putnam County Sheriff's Department
3 County Center
Carmel, New York 10512

Dear Sheriff Smith:

We, the Town Board of the Town of Carmel (the "Town Board"), are writing to memorialize the discussions held over the last several weeks between members of the Town Board, Carmel Police Chief Michael Cazzari, and you and other members of the Putnam County Sheriff's Department regarding the new scope of services the Sheriff's Department's intends to provide the Town of Carmel (the "Town") in 2016 and beyond. Our hope is that this letter will serve as (1) an outline for logistical discussions in the coming weeks, as well as (2) the basis for our collaborative arrangement in the coming years. Furthermore, the Town Board appreciates all past, current and especially future work that the Sherriff's department provided the residents of the Town of Carmel.

The Town Board understands that, beginning January 1, 2016, the Sheriff's Department will assign a 24/7 Sheriff's Department patrol within the Town as follows: (1) to Sector A in January, May, and September; (2) to Sector B in February, June, and October; (3) to Sector C in March, July, and November; and (4) to "detail" duty in April, August, and December. Chief Cazzari will be responsible for providing specific assignments to Sheriff's Department personnel assigned to "detail" duty.

After April of 2016 the Town Board and Sheriff's Department, will discuss whether it is appropriate and beneficial to continue assigning Sheriff's Department personnel to "detail" duty. If the parties agree such detail duty is not appropriate, the Sheriff's Department patrol will rotate only between Sectors A, B, and C on a monthly basis (i.e., four three-month rotations per year as opposed to three four-month rotations as described above).

As discussed during the November 23rd meeting, the parties understand that Sheriff's Department personnel assigned to the Town will not leave the boundaries of the Town to assist other Putnam County municipalities, except under extreme circumstances. You, or your designee, intend to discuss such extreme circumstances with Chief Cazzari prior to any temporary reassignment of Sheriff's Department personnel.

The parties agree they will each take full responsibility of their assigned Sectors regarding patrol, enforcement and investigative duties. For example, if a crime is committed in Sector A in January 2016 that requires further investigation, a Sheriff's Department Investigator,

as opposed to a Town of Carmel Detective, will be responsible for such investigation. However, the Sheriff's Department and Town of Carmel Police Department ("Police Department") will work collaboratively as appropriate.

Notwithstanding the Sector ownership described above, the parties agree that "walk-in" complaints will be handled by the Department receiving the complaint. For example, if a citizen walks in to Police Department headquarters to file a complaint relating to Sector A in January 2016, the Police Department will be responsible for handling the complaint even though the Sheriff's Department would be assigned that Sector at that time. Again, though, the Sheriff's Department and Police Department will work collaboratively as appropriate.

Also notwithstanding the understandings set forth above, at this point, the parties believe the first available or closest patrol should respond to 911 calls, regardless of Sector assignment. However, the parties will continue to discuss the 911 response system in order to determine the best way to serve the Town's citizens.

The Board thanks you and your Department for your consideration and cooperation, Sheriff. We look forward to working together to better serve the people of the Town of Carmel for years to come.

Very truly yours,
TOWN BOARD FOR THE
TOWN OF CARMEL

Frank D. Lombardi

Frank Lombardi
Town of Carmel Deputy Supervisor

Cc: Police Chief Michael Cazzari
Undersheriff Peter Convery