ROBERT LAGA
Chairman

NICHOLAS FANNIN
Vice Chairman

ROSE TROMBETTA
Secretary

TOWN OF CARMEL

ENVIRONMENTAL CONSERVATION BOARD

60 McAlpin Avenue
Mahopac, New York 10541
Tel. (845) 628-1500 - Ext. 190
www.ci.carmel.ny.us

ENVIRONMENTAL CONSERVATION BOARD AGENDA

MARCH 15, 2018 – 7:30 P.M.

ELIGIBLE FOR A PERMIT

APPLICANT	ADDRESS	TAX MAP #	COMMENTS
1. Pulte Homes – Lot 5	Terrace Drive	55.14-1-11.3	Achieve Grading for Approved Site Plan
2. Kirkwood Estates, LLC.	61 Kirk Lake Drive	64.11-1-19	Cleared Path for Boat Ramp

SUBMISSION OF AN APPLICATION OR LETTER OF PERMISSION

3. Savage, Richard	142 West Lake Blvd	75.7-3-4	Capping of Existing Seawall With Concrete Steps.
4. NYCDEP – Shaft 10	1286 Route 6	54.-1-29.2	Replacement of Shaft 10 Bar Racks

ESCROW RETURN

5. McDonald's USA LLC.	1931 Route 6, Carmel	55.11-1-41	Planning Board Referral (Demolish Existing Building & Construct New Building)

MISCELLANEOUS

6. Minutes – 12/21/17, 01/18/18, 02/01/18 & 02/15/18

ROBERT LAGA
Chairman

NICHOLAS FANNIN
Vice-Chairman

ROSE TROMBETTA
Secretary

TOWN OF CARMEL
ENVIRONMENTAL CONSERVATION BOARD

60 McAlpin Avenue
Mahopac, New York 10541
Tel. (845) 628-1500 - Ext. 190
www.ci.carmel.ny.us

APPLICATION FOR WETLAND PERMIT OR LETTER OF PERMISSION

Name of Applicant: Richard R Savage

Address of Applicant: 142 W Lake Blvd. **Email:** Reggie3109@aol.com

Telephone# 914 393 8632 **Name and Address of Owner if different from Applicant:**

Property Address: 142 W Lake Blvd Mahopac **Tax Map #** 75.7-3-4

Agency Submitting Application if Applicable:

Location of Wetland: Lake Mahopac Shore

Size of Work Section & Specific Location: 40 Square feet

Will Project Utilize State Owned Lands? If Yes, Specify: N/A

Type and extent of work (feet of new channel, yards of material to be removed, draining, dredging, filling, etc). A brief description of the regulated activity (attach supporting details). Capping Existing ~~Stop~~ Seawall with concrete step.

Proposed Start Date: ASAP **Anticipated Completion Date:** - **Fee Paid $** -

****

CERTIFICATION

I hereby affirm under penalty of perjury that information provided on this form is true to the best of my knowledge and belief, false statements made herein are punishable as a Class A misdemeanor pursuant to Section 210.45 of the Penal Law. As a condition to the issuance of a permit, the applicant accepts full legal responsibility for all damage, direct or indirect, or whatever nature, and by whomever suffered, arising out of the project described here-in and agrees to indemnify and save harmless the Town of Carmel from suits, actions, damages and costs of every name and description resulting from the said project.

Rich Savage
SIGNATURE

3/13/18
DATE

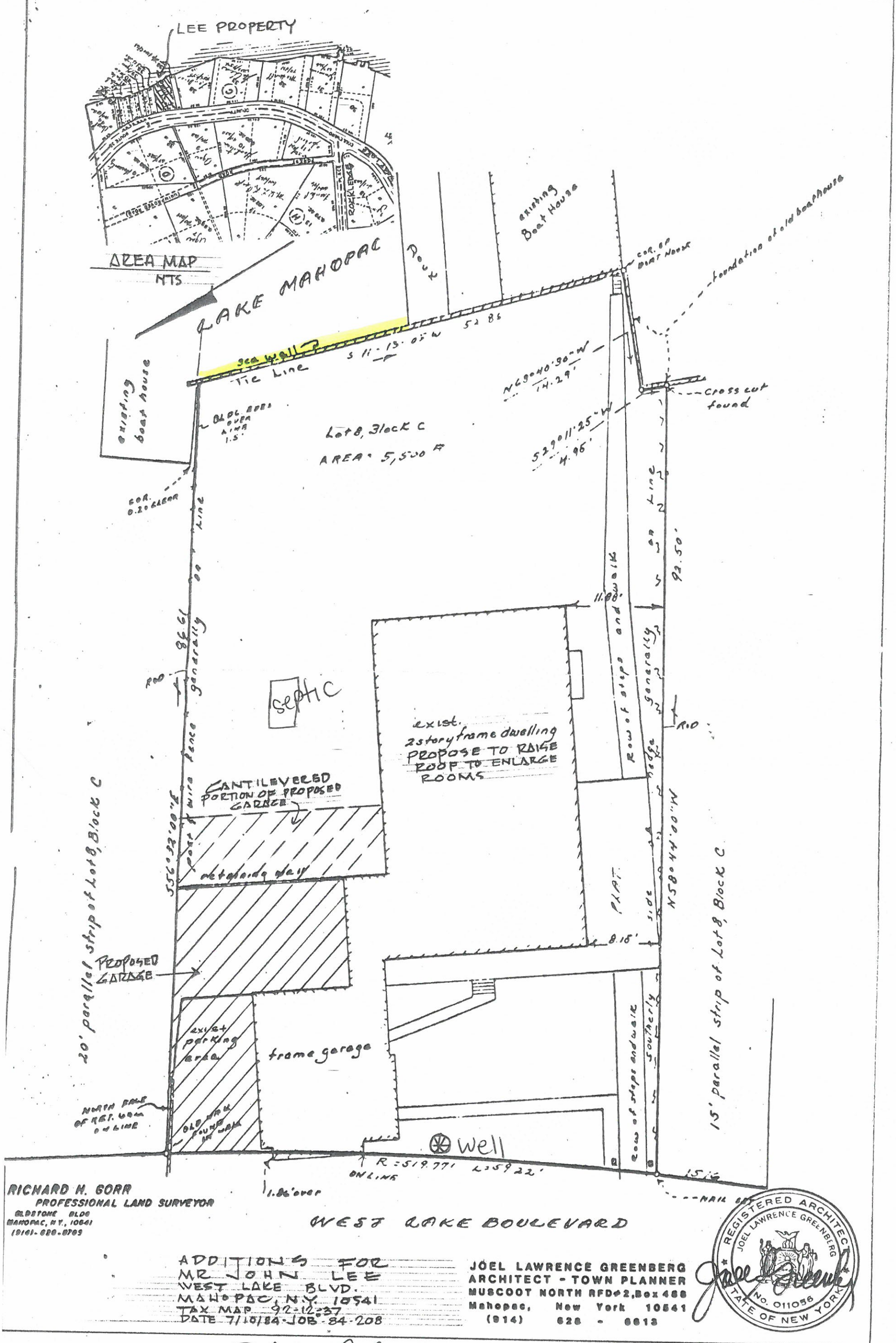
LEE PROPERTY
AREA MAP
NTS
LAKE MAHOPAC
existing Boat House
foundation of old boathouse
cor. of boat house
sea wall
Tie Line
S 11°-13'-05" W 52.86
existing boat house
N 69°40'30" W 14.29'
S 29°11'25" W 4.96'
cross cut found
Lot 8, Block C
AREA = 5,500 ±
cor. 0.20' clear
92.50'
11.00'
septic
exist. 2 story frame dwelling
PROPOSE TO RAISE ROOF TO ENLARGE ROOMS
CANTILEVERED PORTION OF PROPOSED GARAGE
detached deck
PROPOSED GARAGE
20' parallel strip of Lot 8, Block C
15' parallel strip of Lot 8, Block C
2x12 parking area
frame garage
NORTH FACE OF RET. WALL ON LINE
OLD WALL FOUND IN WALL
well
R = 519.771 L = 59.22'
ON LINE
1.86' over
NAIL
WEST LAKE BOULEVARD
RICHARD H. GORR
PROFESSIONAL LAND SURVEYOR
GLDSTONE BLDG
MAHOPAC, N.Y. 10541
(914)-628-8703
ADDITIONS FOR
MR JOHN LEE
WEST LAKE BLVD.
MAHOPAC, N.Y. 10541
TAX MAP 92-12-37
DATE 7/10/84 JOB-84-208
JOEL LAWRENCE GREENBERG
ARCHITECT - TOWN PLANNER
MUSCOOT NORTH RFD#2, Box 488
Mahopac, New York 10541
(914) 628 - 6613
REGISTERED ARCHITECT
JOEL LAWRENCE GREENBERG
No. 011056
STATE OF NEW YORK

NYC DEP

Carmel Board of Environmental Conservation,
The New York City Department of Environmental Protection is planning to reconstruct the bar racks at Delaware Shaft 10, located at 1286 Route 6 in Carmel, NY 10512.

The bar racks are underwater screens which prevent large objects and debris from being sucked into the Delaware Aqueduct. There are four water intake channels. Each intake channel has 7 bar racks stacked on top of each other. Each bar rack is approximately 5'-6" high and 8'-6" long. The racks are seated in embedded grooves on each side. In each channel approximately 43 feet rack depth is underwater and 2 feet is above water.

The contractor will remove debris in front of the racks if applicable and place in a dumpster, lift out the existing racks with a lull and then slide in the new racks.

The general work will be performed under our Job Order Contracting program.
Construction should start in March 2018 and take less than 1 month. The general contractor, RPT/VCI (JV) will be performing the work. This project was developed in-house.

Please feel free to contact me at 914-232-7411, mobile 917-642-6614 or email snielsen@dep.nyc.gov if you have any questions, or from 2/23/2018 Mark DelBalzo, office 914-232-8725, mobile 347-245-8425 or email mdelbalzo@dep.nyc.gov.

ROBERT LAGA
Chairman

NICHOLAS FANNIN
Vice-Chairman

ROSE TROMBETTA
Secretary

TOWN OF CARMEL
ENVIRONMENTAL CONSERVATION BOARD

60 McAlpin Avenue
Mahopac, New York 10541
Tel. (845) 628-1500 - Ext. 190
www.ci.carmel.ny.us

APPLICATION FOR WETLAND PERMIT OR LETTER OF PERMISSION

Name of Applicant: Volmar Construction

Address of Applicant: 302 Main St Highland Falls, NY 10928 **Email:** kevin@volmar.com

Telephone# 845-446-0180 **Name and Address of Owner if different from Applicant:**

NYC DEP

Property Address: 1286 ROUTE 6, CARMEL 10512 **Tax Map #** 54-1-29.2

Agency Submitting Application if Applicable:

Location of Wetland: NYC DEP Shaft 10

Size of Work Section & Specific Location: NYC DEP Shaft 10

Will Project Utilize State Owned Lands? If Yes, Specify: NO

Type and extent of work (feet of new channel, yards of material to be removed, draining, dredging, filling, etc). A brief description of the regulated activity (attach supporting details). Replacement of the Shaft 10 Bar Racks

Proposed Start Date: 3/5/18 **Anticipated Completion Date:** 4/5/18 **Fee Paid $** 50

CERTIFICATION

I hereby affirm under penalty of perjury that information provided on this form is true to the best of my knowledge and belief, false statements made herein are punishable as a Class A misdemeanor pursuant to Section 210.45 of the Penal Law. As a condition to the issuance of a permit, the applicant accepts full legal responsibility for all damage, direct or indirect, or whatever nature, and by whomever suffered, arising out of the project described here-in and agrees to indemnify and save harmless the Town of Carmel from suits, actions, damages and costs of every name and description resulting from the said project.

SIGNATURE

2/21/18
DATE

617.20
Appendix B
Short Environmental Assessment Form

Instructions for Completing

Part 1 - Project Information. The applicant or project sponsor is responsible for the completion of Part 1. Responses become part of the application for approval or funding, are subject to public review, and may be subject to further verification. Complete Part 1 based on information currently available. If additional research or investigation would be needed to fully respond to any item, please answer as thoroughly as possible based on current information.

Complete all items in Part 1. You may also provide any additional information which you believe will be needed by or useful to the lead agency; attach additional pages as necessary to supplement any item.

Part 1 - Project and Sponsor Information

Name of Action or Project:
Replacement of Shaft 10 Bar Racks

Project Location (describe, and attach a location map):
NYC DEP Shaft 10

Brief Description of Proposed Action:
Replacement of existing bar rack with newly fabricated bar racks

Name of Applicant or Sponsor:	Telephone: 845-446-0180
Volman Construction	E-Mail: kewion@volman.com

Address:
302 Main St

City/PO:	State:	Zip Code:
Highland Falls	NY	10929

	NO	YES
1. Does the proposed action only involve the legislative adoption of a plan, local law, ordinance, administrative rule, or regulation? If Yes, attach a narrative description of the intent of the proposed action and the environmental resources that may be affected in the municipality and proceed to Part 2. If no, continue to question 2.	X	
2. Does the proposed action require a permit, approval or funding from any other governmental Agency? If Yes, list agency(s) name and permit or approval:	X	

3.a. Total acreage of the site of the proposed action? _____ acres
b. Total acreage to be physically disturbed? _____ acres
c. Total acreage (project site and any contiguous properties) owned or controlled by the applicant or project sponsor? _____ acres

4. Check all land uses that occur on, adjoining and near the proposed action.
☐ Urban ☐ Rural (non-agriculture) ☐ Industrial ☒ Commercial ☐ Residential (suburban)
☐ Forest ☐ Agriculture ☒ Aquatic ☐ Other (specify): _____
☐ Parkland

	NO	YES	N/A
5. Is the proposed action,			
a. A permitted use under the zoning regulations?			X
b. Consistent with the adopted comprehensive plan?			X

	NO	YES
6. Is the proposed action consistent with the predominant character of the existing built or natural landscape?		X
7. Is the site of the proposed action located in, or does it adjoin, a state listed Critical Environmental Area? If Yes, identify: NYC Reservior		X
8. a. Will the proposed action result in a substantial increase in traffic above present levels?	X	
b. Are public transportation service(s) available at or near the site of the proposed action?	X	
c. Are any pedestrian accommodations or bicycle routes available on or near site of the proposed action?	X	
9. Does the proposed action meet or exceed the state energy code requirements? If the proposed action will exceed requirements, describe design features and technologies:	X	
10. Will the proposed action connect to an existing public/private water supply? If No, describe method for providing potable water: N/A	X	
11. Will the proposed action connect to existing wastewater utilities? If No, describe method for providing wastewater treatment:	X	
12. a. Does the site contain a structure that is listed on either the State or National Register of Historic Places?	X	
b. Is the proposed action located in an archeological sensitive area?	X	
13. a. Does any portion of the site of the proposed action, or lands adjoining the proposed action, contain wetlands or other waterbodies regulated by a federal, state or local agency?		X
b. Would the proposed action physically alter, or encroach into, any existing wetland or waterbody? If Yes, identify the wetland or waterbody and extent of alterations in square feet or acres:	X	

14. Identify the typical habitat types that occur on, or are likely to be found on the project site. Check all that apply:
☒ Shoreline ☐ Forest ☐ Agricultural/grasslands ☐ Early mid-successional
☐ Wetland ☐ Urban ☐ Suburban

	NO	YES
15. Does the site of the proposed action contain any species of animal, or associated habitats, listed by the State or Federal government as threatened or endangered?	X	
16. Is the project site located in the 100 year flood plain?	X	
17. Will the proposed action create storm water discharge, either from point or non-point sources? If Yes, a. Will storm water discharges flow to adjacent properties? ☐ NO ☐ YES	X	
b. Will storm water discharges be directed to established conveyance systems (runoff and storm drains)? If Yes, briefly describe: ☐ NO ☐ YES	X	

	NO	YES
18. Does the proposed action include construction or other activities that result in the impoundment of water or other liquids (e.g. retention pond, waste lagoon, dam)? If Yes, explain purpose and size:	X	
19. Has the site of the proposed action or an adjoining property been the location of an active or closed solid waste management facility? If Yes, describe:	X	
20. Has the site of the proposed action or an adjoining property been the subject of remediation (ongoing or completed) for hazardous waste? If Yes, describe:	X	

I AFFIRM THAT THE INFORMATION PROVIDED ABOVE IS TRUE AND ACCURATE TO THE BEST OF MY KNOWLEDGE

Applicant/sponsor name: Kevin McEll, gtb Date: 2/21/18

Signature:

Part 2 - Impact Assessment. The Lead Agency is responsible for the completion of Part 2. Answer all of the following questions in Part 2 using the information contained in Part 1 and other materials submitted by the project sponsor or otherwise available to the reviewer. When answering the questions the reviewer should be guided by the concept "Have my responses been reasonable considering the scale and context of the proposed action?"

	No, or small impact may occur	Moderate to large impact may occur
1. Will the proposed action create a material conflict with an adopted land use plan or zoning regulations?	X No	
2. Will the proposed action result in a change in the use or intensity of use of land?	No	
3. Will the proposed action impair the character or quality of the existing community?	No	
4. Will the proposed action have an impact on the environmental characteristics that caused the establishment of a Critical Environmental Area (CEA)?	No	
5. Will the proposed action result in an adverse change in the existing level of traffic or affect existing infrastructure for mass transit, biking or walkway?	No	
6. Will the proposed action cause an increase in the use of energy and it fails to incorporate reasonably available energy conservation or renewable energy opportunities?	No	
7. Will the proposed action impact existing: a. public / private water supplies?	Small	
b. public / private wastewater treatment utilities?	No	
8. Will the proposed action impair the character or quality of important historic, archaeological, architectural or aesthetic resources?	No	
9. Will the proposed action result in an adverse change to natural resources (e.g., wetlands, waterbodies, groundwater, air quality, flora and fauna)?	No	

	No, or small impact may occur	Moderate to large impact may occur
10. Will the proposed action result in an increase in the potential for erosion, flooding or drainage problems?	No	
11. Will the proposed action create a hazard to environmental resources or human health?	No	

Part 3 - Determination of significance. The Lead Agency is responsible for the completion of Part 3. For every question in Part 2 that was answered "moderate to large impact may occur", or if there is a need to explain why a particular element of the proposed action may or will not result in a significant adverse environmental impact, please complete Part 3. Part 3 should, in sufficient detail, identify the impact, including any measures or design elements that have been included by the project sponsor to avoid or reduce impacts. Part 3 should also explain how the lead agency determined that the impact may or will not be significant. Each potential impact should be assessed considering its setting, probability of occurring, duration, irreversibility, geographic scope and magnitude. Also consider the potential for short-term, long-term and cumulative impacts.

☐ Check this box if you have determined, based on the information and analysis above, and any supporting documentation, that the proposed action may result in one or more potentially large or significant adverse impacts and an environmental impact statement is required.

☐ Check this box if you have determined, based on the information and analysis above, and any supporting documentation, that the proposed action will not result in any significant adverse environmental impacts.

NEW YORK CITY ENVIRONMENTAL PROTECTION — 2/21/2018

Name of Lead Agency — Date

SVEN NIELSEN

Print or Type Name of Responsible Officer in Lead Agency — Title of Responsible Officer

Sven Niel

Signature of Responsible Officer in Lead Agency — Signature of Preparer (if different from Responsible Officer)

New York City Environmental Protection

Emily Lloyd, Commissioner

Environmental Protection

Bureau of Water Supply
West of Hudson Operations
P.O. Box 358
Grahamsville, NY 12740

Bureau of Water Supply
East of Hudson Operations
465 Columbus Avenue
Valhalla, NY 10595

Request for Proposal

Completed by JOC Project Engineer

Date: 11/09/2015

To:
Kevin McElligott
RPT/VCI (JV)
4400 Second Avenue
Brooklyn, NY 11232

From:
Sven Nielsen
New York City DEP - Bureau of Water Supply EOH
465 Columbus Avenue
Valhalla, NY 10595

Basic Project Information:

Job Order Number:	15-EOD-RPTVC-001.01
Name:	Reconstruction of Bar Racks at Delaware Shaft 10
Contract Number:	CRO-544G
Location:	Delaware Aqueduct Shaft 10

Dear Mr McElligott:

The Department of Environmental Protection of the City of NewYork requests that you provide a Proposal Package including a Price Proposal, subctontractor list, schedule, incidental drawings, and other information as appropriate.

The attached detail Scope of work was discussed at the site on September 17, 2014

Proposed Work Schedule:

Liquid Damages will apply

Incidental Drawings Required:

Shop drawings showing all members, sizes, connections and details of proposed construction, if applicable.

Material Submittals:

Catalogue cuts and MSDS sheets of all materials to be used in this project.

Special Instructions:

The Contractor shall notify the Engineer and the facility supervisor at least 48 hours prior to start of construction. The Contractor shall report to the facility supervisor the number of employees on the job daily. All employees shall sign in and out and original sign-in sheets shall be made available to the Engineer at latest the next morning for the previous day's work. Originals shall be delivered or mailed to the Engineer after every week but prior to next week. The Contractor shall perform work under this contract on Monday thru Friday, exclusive of legal holidays, between the hours of 8:00 a.m. and 4:00 p.m. unless otherwise authorized by the Engineer.

Comments:

None

Your Proposal is due on or before November 23, 2015.

Sincerely,

Sven Nielsen

Sven Nielsen, JOC Program Engineer

11/09/2015

Date

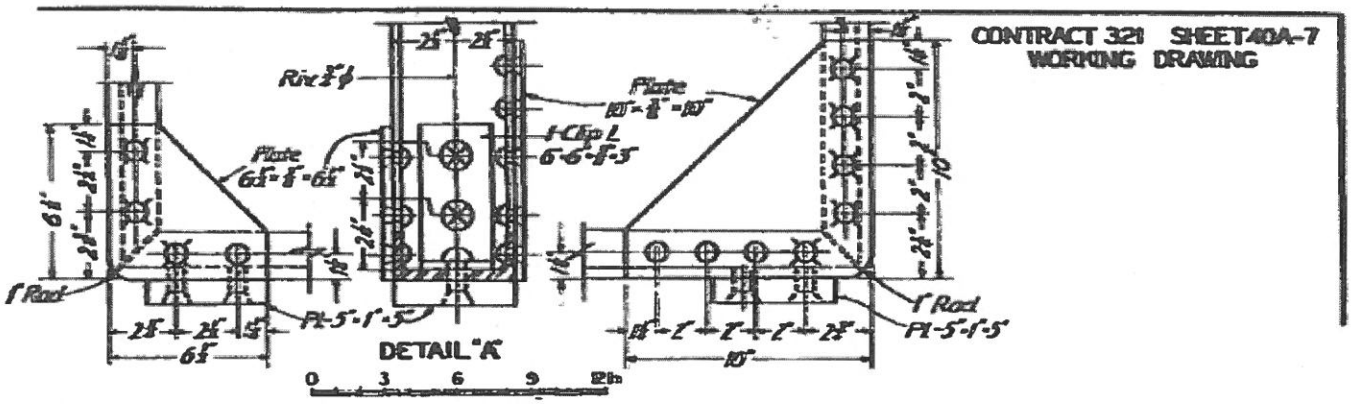

EXISTING

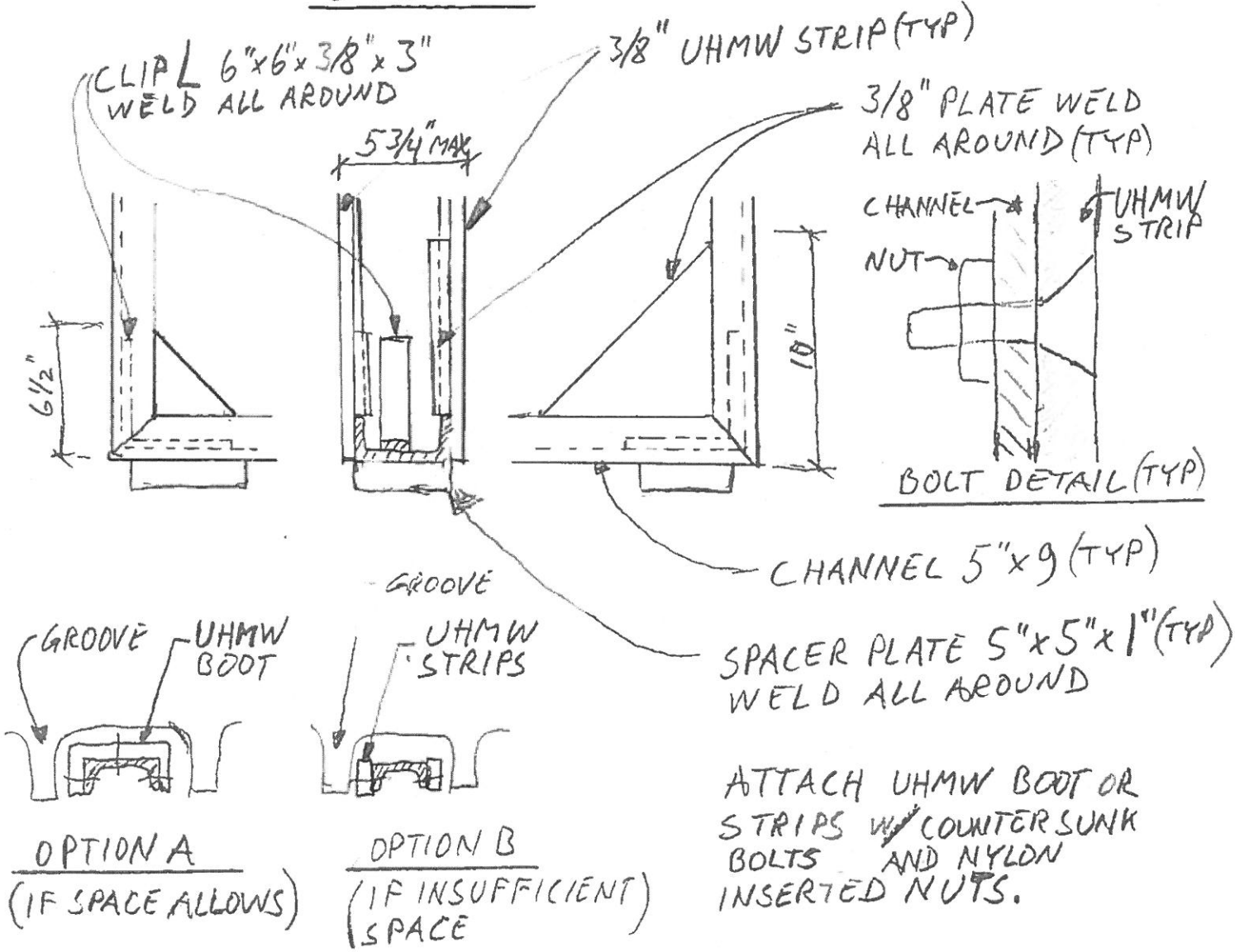

PROPOSED SKETCH UHMW STRIPS

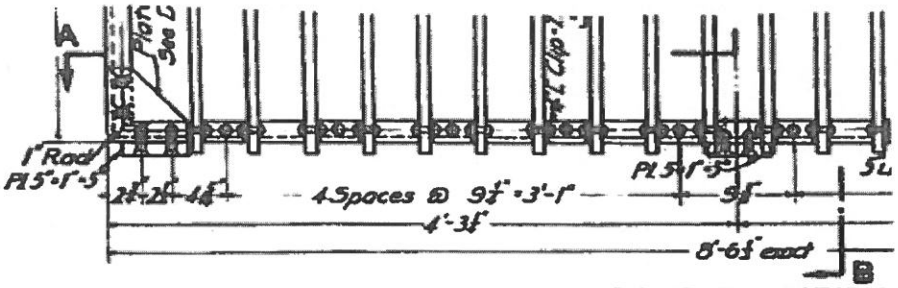

FRONT ELEVATION

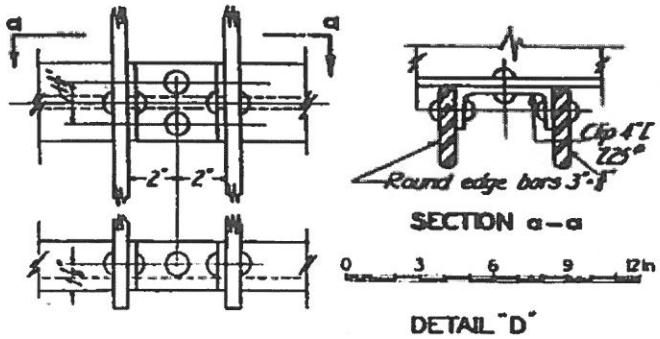

EXISTING

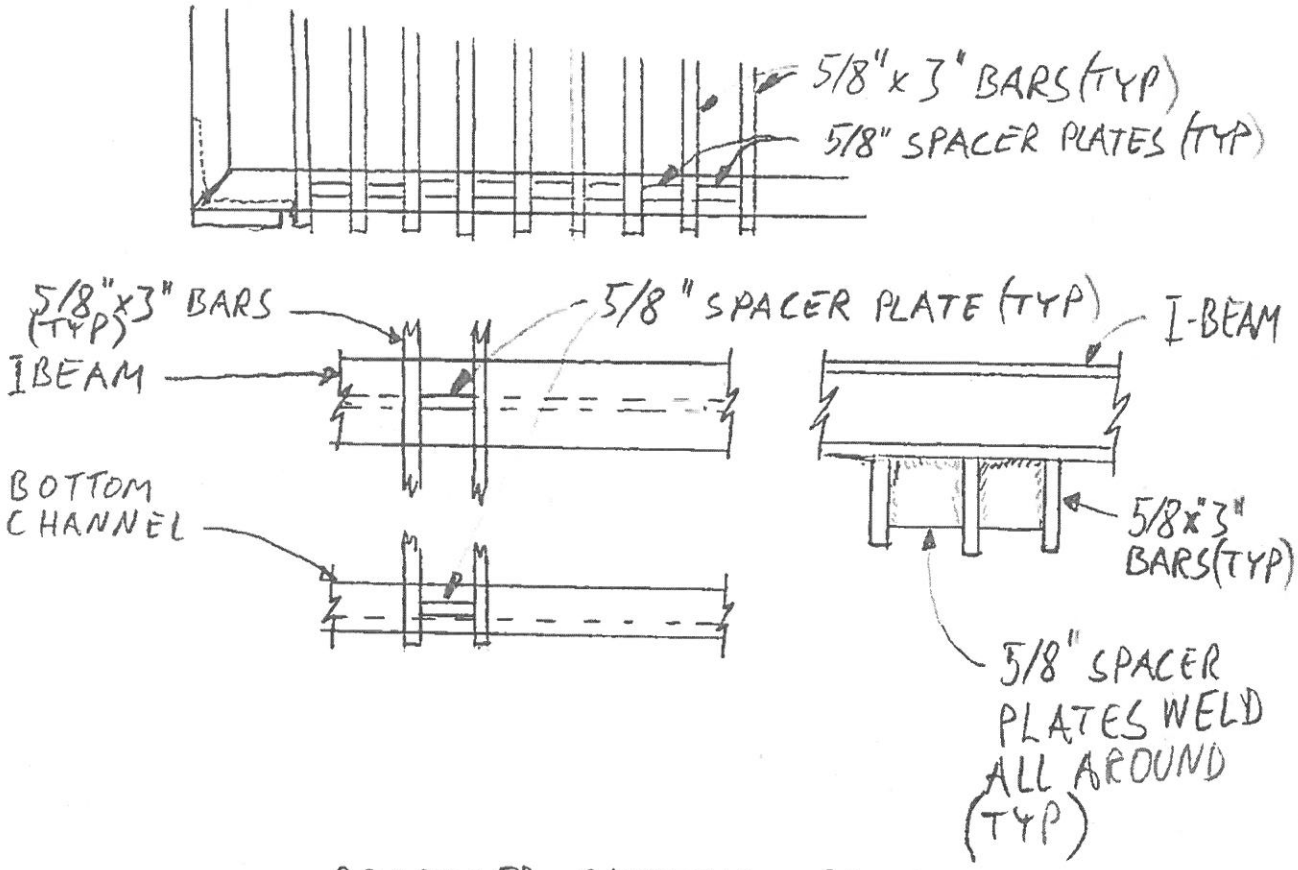

PROPOSED SKETCH SPACER PLATES

CONTRACT 321 SHEET 40A-7
WORKING DRAWING

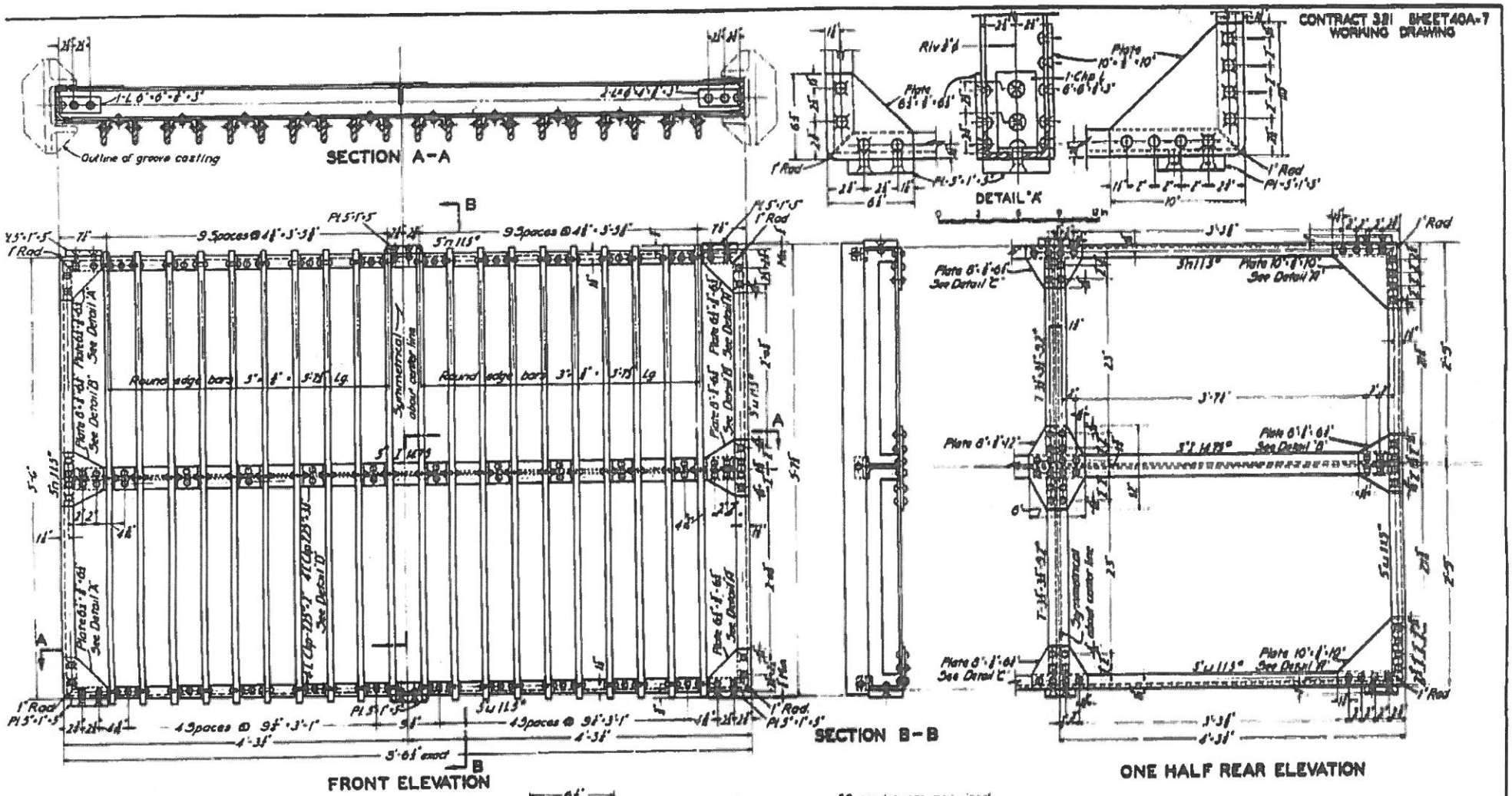

20 racks are required.
The racks shall be galvanized after assembly in accordance with the requirements of Item 47 of the Specifications.
All rivets in webs of channels and beams to be 3/4" diam., holes 13/16" diam., and all other rivets to be 3/4" diam, holes 13/16" diam.
For location and details of cast iron rack grooves see Sheet 23E-9, Acc. 47083 and Sheet 39A, Acc 45126.
All distortions in rack frames after galvanizing shall be removed and the frames made true for proper insertion in the grooves.

Dept. Eng Hqrs
Chief Eng

Drawn H.L.M.
Traced J.K.L.
Checked F.R.P. W.A.
Designing Eng.

Ref-Acc 36948

City of New York
BOARD OF WATER SUPPLY
DELAWARE AQUEDUCT
WEST BRANCH-KENSICO TUNNEL
WEST BRANCH EFFLUENT CHAMBER
RACKS FOR RESERVOIR WATERWAYS
STRUCTURAL DETAILS

FEBRUARY 3, 1941
File Cont 321-3.450 DWK Acc 40893

CONTRACT 381 SHEET 40A-44
WORKING DRAWING

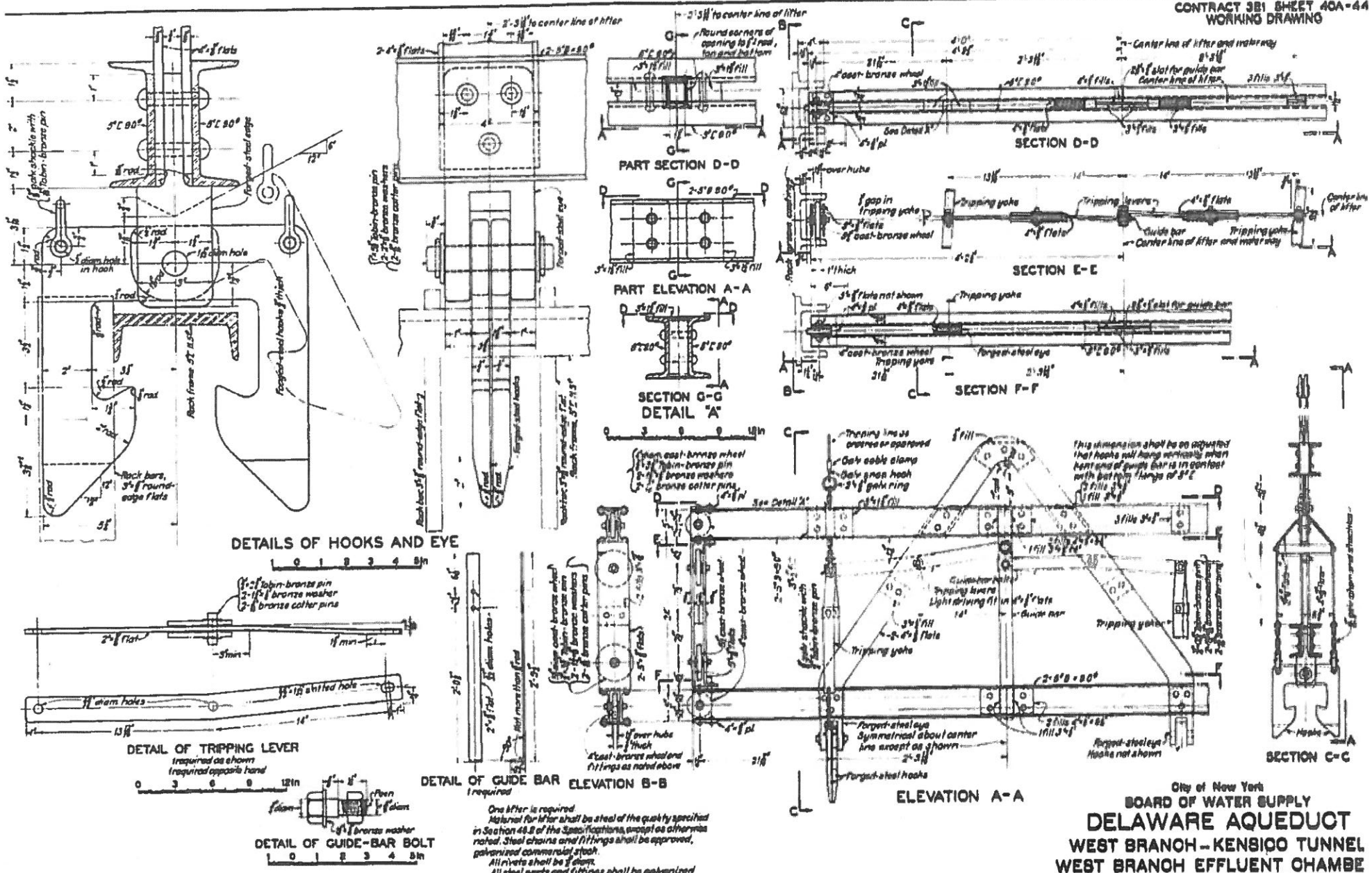

One lifter is required.

Material for lifter shall be steel of the quality specified in Section 48.8 of the Specifications, except as otherwise noted. Steel chains and fittings shall be approved, galvanized commercial stock.

All rivets shall be ⅞" diam.

All steel parts and fittings shall be galvanized as specified under Item 47.

Holes in cast bronze wheels for Tobin-bronze pins shall be drilled ⅛" larger in diam than pins. Holes in steel frame for these pins shall be light drive fit.

City of New York
BOARD OF WATER SUPPLY

DELAWARE AQUEDUCT

WEST BRANCH – KENSICO TUNNEL
WEST BRANCH EFFLUENT CHAMBE
RACK LIFTER

OCTOBER 20, 1949

File Cont 381 & 434 DWK Res 88

Drawn AGE
Traced BAB
Checked
Chief Designing Eng

Asst Eng Hdqrs
Deputy Chief Eng

CONTRACT 321 SHEET 30 A
WORKING DRAWING

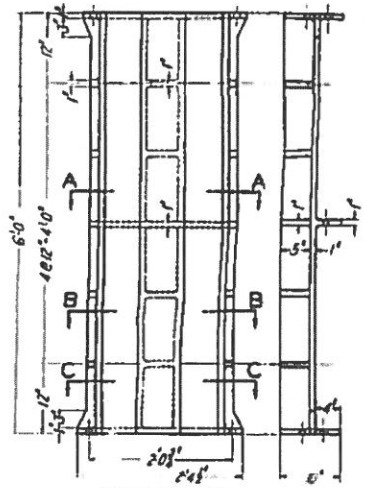

ELEVATIONS
MARK 6LG-1

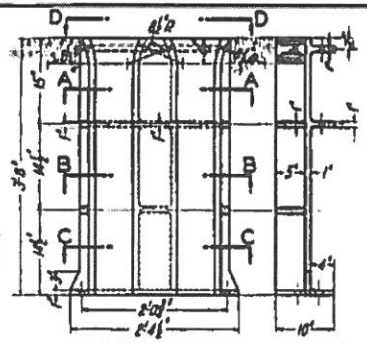

ELEVATIONS
MARK 6LG-3

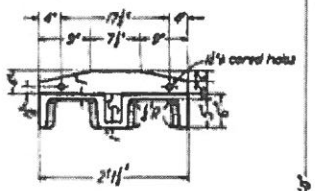

ELEVATION D-D

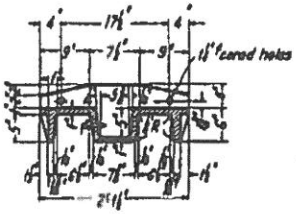

SECTION A-A

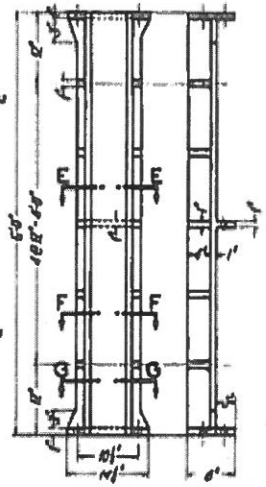

ELEVATIONS
MARK RG-1

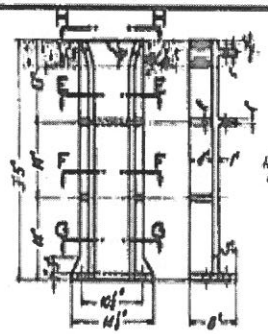

ELEVATIONS
MARK RG-3

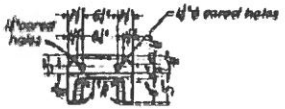

ELEVATION H-H

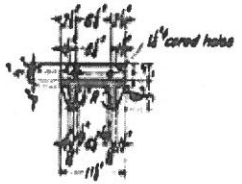

SECTION E-E

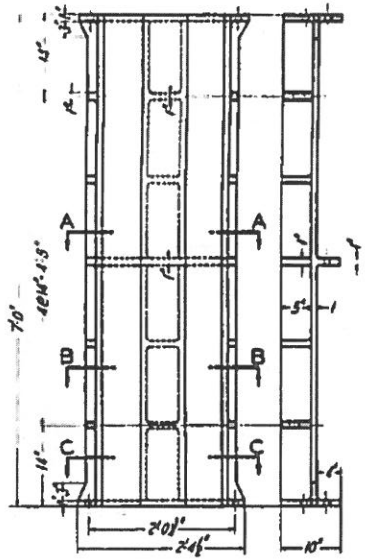

ELEVATIONS
MARK 6LG-2

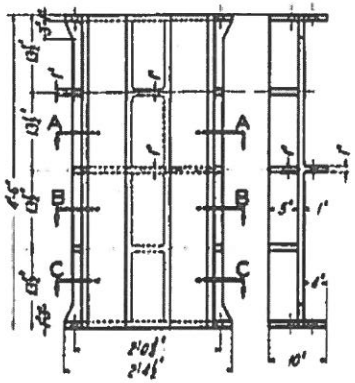

ELEVATIONS
MARK 6LG-4

SECTION B-B

SECTION F-F

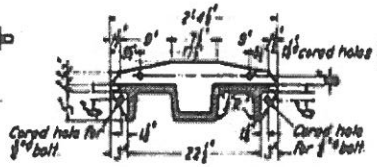

SECTION C-C

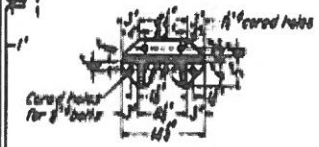

SECTION G-G

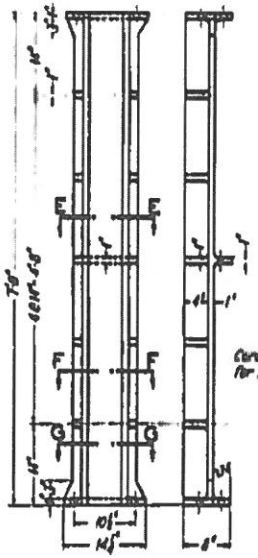

ELEVATIONS
MARK RG-2

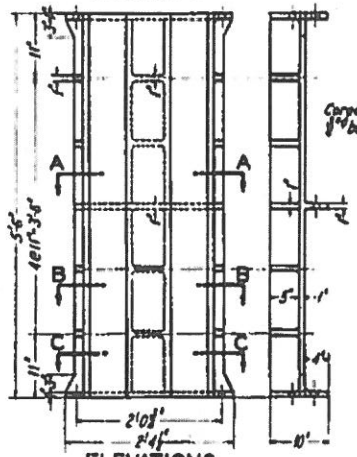

ELEVATIONS
MARK 6LG-5

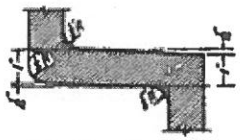

DETAIL OF DRAW

SCHEDULE

Mark	Number Required			Weight per Length
	Shaft 8	Shaft 10	Total	
6LG-1	-	14	14	[illegible]
6LG-2	132	228	360	[illegible]
6LG-3	24	36	60	[illegible]
6LG-4	-	72	72	[illegible]
6LG-5	12	4	16	[illegible]
RG-1	-	8	8	[illegible]
RG-2	-	48	48	[illegible]
RG-3	-	8	8	[illegible]

End flanges to be cast smooth and true faces of grooves shall be cast smooth and without wind.

The allowable variation in length of casting shall be ⅛". All other dimensions except the draw shall not vary by more than ¼".

Surfaces that will be exposed after placing in masonry shall be given one coat of Dwight's Red Lead Graphite Primer No 101, or equal, in the shop as required by section 88 7 of the Specifications.

After castings are placed in masonry, exposed surfaces shall be painted in the field, under Item 81, with two coats of the Barrett Company's "Enogel" or equal.

Castings marked 6LG-1, 6LG-2 etc are stop-shutter groove castings for 6'-0" water ways.

Castings marked RG-1, RG-2 and RG-3 are rack groove castings.

Bolts required: 5/8" ⌀ diameter by 3½" long under head, with hexagonal head and nuts. Each bolt to be furnished with 2 washers.

Drawings showing location of castings in substructure will be furnished.

Revisions of MARCH 22, 1940 shown thus +

Drawn H.L.M.
Traced C.A.P.
Checked-Chief H.L.G. S.E.
Ralph L. Steen
Designing Eng

Robert Armstrong
Dept Eng Hdqrs
Patton P. Spear
Chief Eng

City of New York
BOARD OF WATER SUPPLY
DELAWARE AQUEDUCT
RONDOUT-WEST BRANCH TUNNEL AND WEST BRANCH-KENSICO TUNNEL
WEST BRANCH INFLUENT AND EFFLUENT CHAMBER CAST IRON RACK AND STOP SHUTTER GROOVES

0 1 2 ft

OCTOBER 26, 1939

File Cont 321-8430 [illegible]

Rec 65111

CONTRACT 381 SHEET 39A-1
WORKING DRAWING

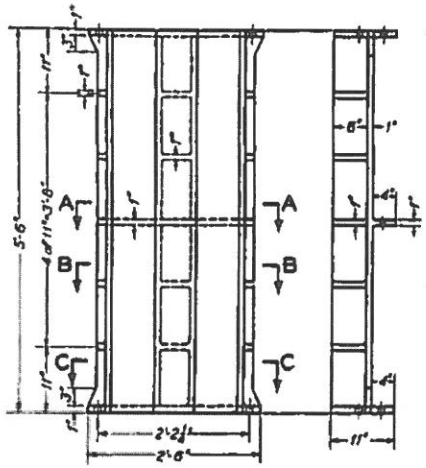

ELEVATIONS
MARK 7LG-1

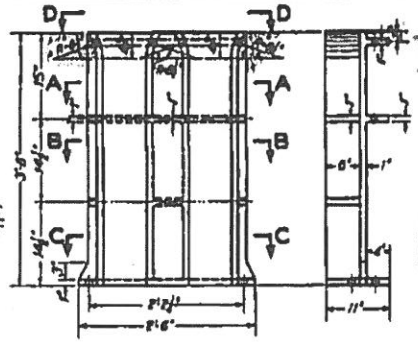

ELEVATIONS
MARK 7LG-3

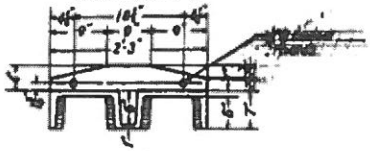

ELEVATION D-D

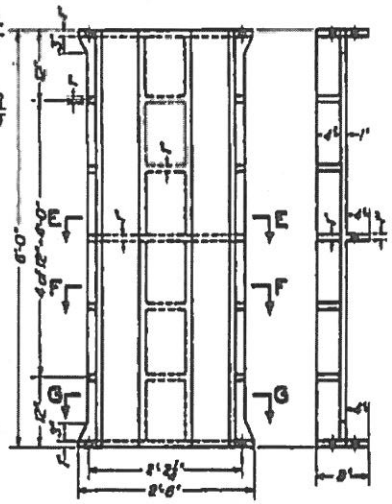

ELEVATIONS
MARK SG-1

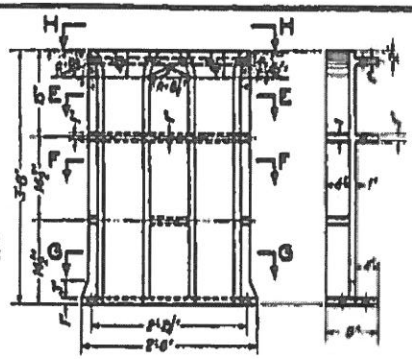

ELEVATIONS
MARK SG-3

SECTION F-F

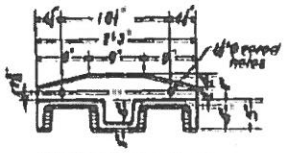

ELEVATION H-H

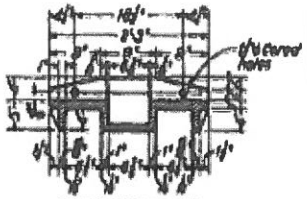

SECTION E-E

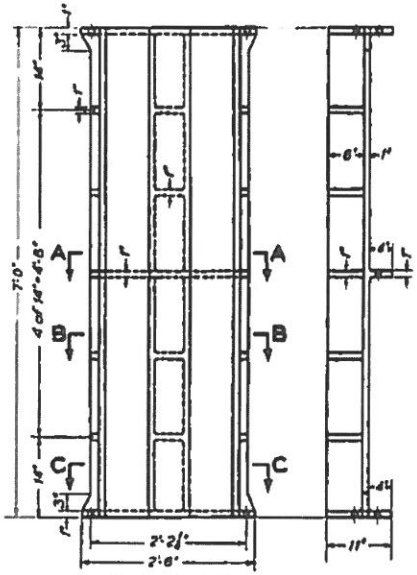

ELEVATIONS
MARK 7LG-2

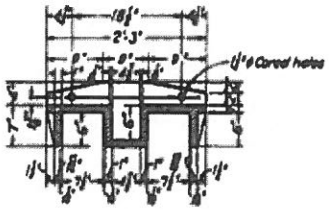

SECTION A-A

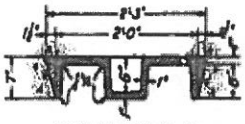

SECTION B-B

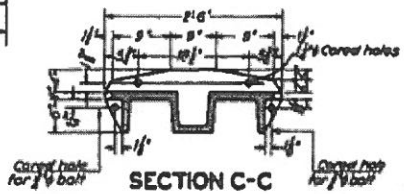

SECTION C-C

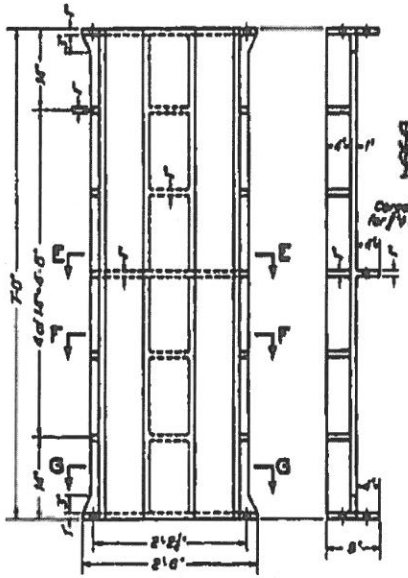

ELEVATIONS
MARK SG-2

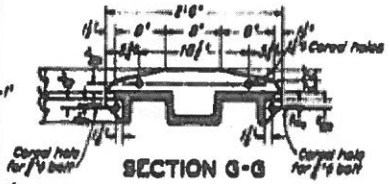

SECTION G-G

End flanges to be cast smooth and true. Faces of grooves shall be cast smooth and without warp.

The allowable variation in length of castings shall be 1/8. All other dimensions, except the draw, shall not vary by more than 1/8.

Surfaces that will be exposed after placing in masonry shall be given one coat of Dutch Red Lead Graphite Primer No 104, or equal, in the shop as required by section 46 V of the Specifications.

After castings are placed in masonry, exposed surfaces shall be painted in the field, under Item 84, with two coats of the Carrel Company's "Evaqua" or equal.

Castings marked 7LG-1, 7LG-2, and 7LG-3 are also shutter groove castings for 7'0" water way.

Castings marked SG-1, SG-2, and SG-3 are screen groove castings.

Bolts required: 388 3/4" diameter by 3 1/2" long, under head, with hexagonal head and nuts. Each bolt to be furnished with 2 washers.

Drawings showing location of castings in substructure will be furnished.

For detail of draw see Sheet 38A, Acc. 45126.

SCHEDULE +

Mark	Number Required	Weight per unit, lbs.
7LG-1	12	1018
7LG-2	96	1255
7LG-3	12	692
SG-1	8	843
SG-2	48	1078
SG-3	8	600

Revisions of MARCH 22, 1940 shown thus +

Drawn J.L.C.
Traced S.B.
Checked Eng. W.J.G. S.C.
Designing Eng.
Ref. Acc. 44623

Deputy Eng Helgrs
Chief Eng

City of New York
BOARD OF WATER SUPPLY

DELAWARE AQUEDUCT

WEST BRANCH-KENSICO TUNNEL
WEST BRANCH EFFLUENT CHAMBER
CAST IRON SCREEN AND STOP SHUTTER GROOVES

0 1 2 ft

OCTOBER 20, 1939

File Cont 381-5.438 DWG Acc 45127

Incinerator Rd
10

Specification
for
STAINLESS STEEL WORK

PART I GENERAL

1.01 SECTION INCLUDES

A. The Contractor shall furnish, install and erect the stainless steel work as shown on the Contract Drawings, called for in the Detailed Specifications and specified herein.

B. Stainless steel work shall be furnished complete with all accessories, mountings and appurtenances of the type of stainless steel and finish as specified or required for a satisfactory installation.

C. The following index of this Specification is presented for convenience.

1.02 RELATED SPECIFICATION

A. General Specification 05091 - Welding.

1.03 PAYMENT

A. Payment for stainless steel work and appurtenances will be made as provided for in the Detailed Specifications.

B. No payment will be made for an item included as part of the work under another Section unless otherwise specified in the Detailed Specifications.

C. No separate payment will be made for appurtenances and materials required for a complete installation, the cost thereof shall be included in the price bid for the stainless steel work.

1.04 REFERENCES

A. ASTM A193 - Alloy-Steel and Stainless Steel Bolting Materials for High-Temperature Service.

B. ASTM A194 - Carbon and Alloy Steel Nuts for Bolts for High-Pressure and High-Temperature Service.

C. ASTM A262 - Practice for Detecting Susceptibility to Intergranular Attack in Austenitic Stainless Steel.

D. ASTM A276 - Stainless and Heat-Resisting Steel Bars and Shapes.

E. ASTM A314 - Stainless and Heat-Resisting Steel Billets and Bars for Forging.

F. ASTM A380 - Practice for Cleaning and Descaling Stainless Steel Parts, Equipment and Systems.

G. ASTM A473 - Stainless and Heat-Resisting Steel Forgings.

H. ASTM A666 - Austenitic Stainless Steel, Sheet, Strip, Plate and Flat Bar.

I. ASTM F593 - Stainless Steel Bolts, Hex Cap Screws and Studs.

J. ASTM F594 - Stainless Steel Nuts.

K. ASME B1.1 - Unified Inch Screw Thread (UN and UNR Thread Form).

1.05 TESTS

A. All stainless steel materials including stainless test welds, shall be checked for compliance with tests for susceptibility to intergranular attack. Such tests shall be Practices A, B and E of ASTM A262. Detailed procedures for the tests shall be submitted to the Engineer for approval prior to start of work. Practice A shall be

used only for acceptance of materials but not for rejection of materials, and shall be used for screening material intended for testing in Practice B and Practice E. The maximum acceptable corrosion rate under Practice B shall be 0.004 inch per month, rounded off to the third decimal place. If the certified mill report indicates that such test has been satisfactory performed, the fabricator may not be required to repeat the test. Material passing Practice E shall be acceptable.

B. Sample selection for the susceptibility to intergranular attack tests shall be as follows:

1. One (1) sample per each heat treatment lot for plates and forgings;

2. One (1) sample per each Welding Procedure Qualification regardless of the joint design;

3. If tests indicate a reduction in corrosion resistance, welding procedure shall be adjusted or heat treatment determined as needed to restore required corrosion resistance;

4. The samples so chosen shall have received all the post-weld heat treatments identical to the finished part.

1.06 SUBMITTALS

A. The Contractor shall prepare and submit for approval shop drawings for all stainless steel fabrication in accordance with the General Conditions, Article 4 - Contractor's Working Drawings, Design and Shop Drawings; and the submittal procedures of Division 1.

B. Submittals shall include, but not be limited to, the following:

1. Certified test reports for susceptibility to intergranular attack.

2. Affidavit of compliance with type of stainless steel shown on the Contract Drawings or specified in the Detailed Specifications.

3. Certified weld inspection reports.

4. Cleaning and handling of stainless steel in accordance with Paragraph 3.04, Cleaning and Handling.

C. Samples of finish, on each type of stainless steel to be furnished, shall be submitted in accordance with the General Conditions, Article 5, paragraph titled "Samples of Materials."

1.07 QUALITY ASSURANCE

A. Shop inspections may be made by the City representatives. The Contractor shall give ample notice to the Engineer prior to the beginning of any stainless steel

fabrication work so that inspection may be provided. The Contractor shall furnish all facilities for the inspection of materials and workmanship in the shop, and the inspectors shall be allowed free access to the necessary parts of the works.

B. Inspectors shall have the authority to reject any materials or work which does not meet the requirements of the Contract Drawings or the Detailed Specifications.

C. Inspection at the shop is intended as a means of facilitating the work and avoiding errors, but is expressly understood that it will in no way relieve the Contractor from his responsibility for furnishing proper materials or workmanship.

1.08 HANDLING, STORAGE AND DELIVERY

A. Mechanical damage (e.g., scratches and gouges) to the stainless steel material can occur during handling. Care shall be taken in the material handling since such mechanical damage will result in the passive oxide film being "punctured" leading to a possible lower resistance to the initiation of corrosion than the surrounding chemically-passivated surface. Corrosion in such areas can be accelerated by the galvanic corrosion effect due to the unfavorable relative area ratios which would exist.

B. Stainless steel plates and sheets shall be stored vertically in racks and not be dragged out of the racks or over one another. Racks shall be protected to prevent iron contamination.

C. Heavy stainless steel plates shall be carefully separated and chocked with wooden blocks so that the forks of a fork-lift could be inserted between plates without mechanically damaging the surface.

D. Stainless steel plates and sheets laid out for use shall be off the floor and be divided by wooden planks to prevent surface damage and to facilitate subsequent handling.

E. Plate clamps, if used, shall be used with care as the serrated faces can dig in, indent and gouge the surface.

F. Stainless steel fabrications shall be loaded in such a manner that they may be transported and unloaded without being overstressed, deformed or otherwise damaged.

G. Stainless steel fabrications and packaged materials shall be protected from corrosion and deterioration and shall be stored in a dry area. Materials stored outdoors shall be supported above ground surfaces on wood runners and protected with approved effective and durable covers.

H. Stainless steel fabrications shall not be placed in or on a structure in a manner that might cause distortion or damage to the fabrication. The Contractor shall repair or replace damaged stainless steel fabrications or materials as directed by the Engineer.

1.09 FIELD MEASUREMENTS

A. The Contractor shall verify all dimensions and shall make any field measurements necessary and shall be fully responsible for accuracy and layout of the work.

B. The Contractor shall review the Contract Drawings and any discrepancies shall be reported to the Engineer for clarification prior to starting fabrication.

PART 2 PRODUCTS

2.01 MATERIALS AND FINISHES

A. Type and finish of stainless steel to be utilized for fabrication shall be the type and finish indicated on the Contract Drawings or in the Detailed Specifications for the intended service and conforming to the applicable ASTM standard.

B. The basic mill forms (sheet, strip, plate and bar) are classified by size as shown on Table 1. Tables 2, 3 and 4 identify finishes and conditions in which sheet, bar and plate are available.

C. Tables 2, 3 and 4 show numbered finishes and conditions for sheet, bar and plate. While there are no specific designations for polished finishes on bar or plate, the sheet finish designations are used to describe the desired effect. This also applies to finishes on ornamental tubing.

D. There are three standard finished for strip, which are broadly described by the finishing operations employed:

1. No. 1 Strip Finish is approximately the same as No. 2D Sheet Finish. It varies in appearance from dull gray matte to a fairly reflective surface, depending largely on alloy composition and amount of cold reduction.

2. No. 2 Strip Finish is approximately the same as a No. 2B sheet finish. It is smoother, more reflective than No. 1, and likewise varies with alloy composition.

3. Bright annealed finish is a highly reflective finish that is retained by final annealing in a controlled atmosphere furnace.

Table 1
CLASSIFICATION OF STAINLESS STEEL PRODUCT FORM

Item	Description	Dimensions		
		Thickness	Width	Diameter or Size
Sheet	Coils and cut length: Mill finishes Nos. 1, 2D and 2B Polished finishes Nos. 3, 4, 6, 7 & 8	 under 3/16" under 3/16"	 24" and over all widths	 -- --
Strip	Cold finished, coils or cut lengths Polished finishes Nos. 3, 4, 6,7 & 8	under 3/16" under 3/16"	under 24" all widths	-- --
Plate	Flat rolled or forged	3/16" and over	over 10"	--
Bar	Hot finished rounds, squares, octagons and hexagons Hot finished flats Cold finished rounds, squares, octagons and hexagons Cold finished flats	-- 1/8" to 8" incl. -- 1/8" to 4-1/2"	-- 1/4" to 10" incl. -- 3/8" to 4-1/2"	1/4" and over -- over 1/8" --
Wire	Cold finishes only: (in coil) Round, square, octagon, hexagon and flat wire	 under 3/16"	 under 3/8"	 --
Pipe & Tubing	Several different classifications, with differing specifications, are available.			
Extrusion	Not considered Astandard@ shapes. Currently limited in size to approximately 6-1/2" diameter or structurals.			

Table 2

STANDARD MECHANICAL SHEET FINISHES

Unpolished or Rolled Finishes: No. 1 A rough dull surface which results from hot rolling to the specified thickness followed by annealing and descaling.	No. 4 A polished surface obtained by finishing with a 120-150 mesh abrasive, following initial grinding with coarser abrasives. This is a general purpose bright finish with a visible "grain" which prevents mirror reflection.
No. 2D A dull finish which results from cold rolling followed by annealing and descaling, and may perhaps get a final light roll pass through unpolished rolls. A 2D finish is used where appearance is of no concern.	No. 6 A dull satin finish having lower reflectivity than No. 4 finish. It is produced by Tampico brushing the No. 4 finish in a medium of abrasive and oil. It is used for architectural applications and ornamentation where a high luster is undesirable, and to contrast with brighter finishes.
No. 2B A bright cold-rolled finish resulting in the same manner as No. 2D finish, except that the annealed and descaled sheet receives a final light roll pass through polished rolls. This is the general purpose cold-rolled finish that can be used as is, or as a preliminary step to polishing.	No. 7 A high reflective finish that is obtained by buffing finely ground surfaces but not to the extent of completely removing the "grit" lines. It is used chiefly for architectural and ornamental purposes.
Polished Finishes: No. 3 An intermediate polish surface obtained by finishing with a 100 grit abrasive. Generally used where a semi-finished polished surface is required. A No. 3 finish usually receives additional polishing during fabrication.	No. 8 The most reflective surface, which is obtained by polishing with successively finer abrasives and buffing extensively until all grit lines from preliminary grinding operations are removed. It is used for applications such as mirrors and reflectors.

Table 3
CONDITIONS AND FINISHES FOR BAR

Conditions	Surface Finishes[1]
Hot worked only	(a) Scale not removed (excluding spot conditioning) (b) Rough turned[2] (c) Pickled or blast cleaned and pickled.
Annealed or otherwise heat treated.	(a) Scale not removed (excluding spot conditioning) (b) Rough turned (c) Pickled or blast cleaned and pickled (d) Cold drawn or cold rolled (e) Centerless ground (f) Polished
Annealed and cold worked to high tensile strength[3]	(d) Cold drawn or cold rolled (e) Centerless ground (f) Polished

Table 4

CONDITIONS AND FINISHES FOR PLATE

Condition and Finish	Description and Remarks
Hot rolled	Scale not removed. Not heat treated. Plates not recommended for final use in this condition.[4]
Hot rolled, annealed or heat treated	Scale not removed. Use of plates in this condition is generally confined to heat resisting applications. Scale impairs corrosion resistance.[1]
Hot rolled, annealed or heat treated, blast cleaned or pickled	Condition and finish commonly preferred for corrosion resisting and most heat resisting applications.
Hot rolled, annealed, descaled and temper passed	Smoother finish for specialized applications.
Hot rolled, annealed, descaled cold rolled, annealed, descaled, optionally temper passed	Smooth finish with greater freedom from surface imperfection than the above.
Hot rolled, annealed or heat treated, surface cleaned and polished	Polished finishes refer to Table 2.

Notes:

1. Surface finishes (b), (e) and (f) are applicable to round bars only.
2. Bars of the 4xx series stainless steels which are highly hardenable, such as Types 414, 420, 420F, 431, 440A, 440B and 440C, are annealed before rough turning. Other hardenable grades, such as Types 403, 410, 416 and 416Se, may also require annealing depending on their composition and size.
3. Produced in Types 302, 303Se, 304 and 316.
4. Surface inspection is not practicable on plates which have not been pickled or otherwise descaled.

PART 3 EXECUTION

3.01 FABRICATION

A. Holes for bolts and screws shall be drilled. Fastenings shall be concealed where practicable. Joints exposed to the weather shall be formed to exclude water.

B. As far as practicable, all fabricated units shall be fitted and assembled in the shop, with all cuts and bends made to precision measurements in accordance with details shown on approved shop drawings.

C. Work shall be fabricated so that it is installed in a manner that will provide for expansion and contraction, prevent the shearing of bolts, screws and other fastenings, ensure rigidity, and provide close fitting of sections.

D. All finished and/or machined faces shall be true to line and level. Stainless steel sections shall be well formed to shape and size with sharp lines and angles; curved work shall be sprung evenly to curves.

E. All work shall be fitted together at the shop as far as possible, and delivered complete and ready for erection. Proper care shall be exercised in handling all work so as not to injure the finished surfaces.

3.02 WELDING

A. Welding shall be done in a manner that will prevent buckling and in accordance with General Specification 05091 - Welding, and as modified hereinafter.

B. All welds exposed in the work shall be ground smooth and finished to match the finish of the adjacent stainless steel surfaces.

C. Select weld rods that provide weld filler metal having corrosion resistant properties as nearly identical or better than the base metal to insure preservation of the corrosion-resistant properties. Provide heat treatment at welds where testing of weld procedure indicates it is required to restore the corrosion resistance.

D. Thermal conductivity of stainless steel is about half that of other steels; and the following methods may be used to accommodate this situation:

1. Use lower weld current setting.

2. Use skip-weld techniques to minimize heat concentration.

3. Use back-up chill bars or other cooling techniques to dissipate heat.

E. Edges of the stainless steel to be welded shall be cleaned of contaminants.

3.03 FASTENERS

A. Stainless steel fasteners shall be used for joining stainless steel work.

B. Stainless steel fasteners shall be made of alloys that are equal to or more corrosion resistant than the materials they join.

3.04 CLEANING AND HANDLING

A. All stainless steel surfaces shall be precleaned, descaled, passivated and inspected before, during and after fabrication in accordance with the applicable sections of ASTM A380 and as detailed in the procedures to be submitted to the Engineer for approval prior to start of work. Degreasing and passivation of stainless steel articles shall be conducted as the last step after fabrication.

B. Measures to protect cleaned surfaces shall be taken as soon as final cleaning is completed and shall be maintained during all subsequent handling, storage and shipping.

1. The Contractor shall submit for approval specific procedures listing all the steps to be followed in detecting contamination and in descaling, cleaning, passivation and protecting of all stainless steel.

2. Area showing clear indications of contamination shall be recleaned, repassivated and reinspected.

C. At approved stages in the shop operations, contaminants such as scale, embedded iron, rust, dirts, oil, grease and any other foreign matter shall be removed from the metal, as directed or approved by the Engineer. The adequacy of these operations shall be checked by the Engineer. Operations in the shop shall be conducted so as to avoid contamination of the stainless steel and to keep the metal surfaces free from dirt and foreign matter.

D. In order to prevent incipient corrosion during fabrication, special efforts shall be made at all times to keep all stainless steel surfaces from coming in contact with other metals.

1. Stainless steel and stainless steel welds shall be cleaned with clean sand, stainless steel wool, stainless steel brushes, or other approved means and shall be protected at all times from contamination by any materials, including carbon steel, that shall impair its resistance to corrosion.

2. Approved methods of cutting grinding and handling shall be used to prevent contamination. If air-arc, or carbon-arc cutting is used, additional metal shall be removed by approved mechanical means so as to provide clean, weldable edges. All grinding of stainless steel shall be performed with aluminum oxide or silicon carbide grinding wheels bonded with resin or rubber. Grinding wheels used on carbon steel shall not be used on stainless steel.

3. Sand, grinding wheels, brushes and other materials used for cleaning stainless steel shall be checked periodically by the Engineer for contaminants. Cleaning aids found to contain contaminants shall not be used on the work.

3.05 INSTALLATION

A. All stainless steel fabrications shall be erected square, plumb and true, accurately fitted, adequately anchored in place, set at proper elevations and positions.

B. All inserts, anchor bolts and all other miscellaneous work specified in the Detailed Specifications or shown on the Contract Drawings or required for the proper completion of the work, which are embedded in concrete, shall be properly set and securely held in position in the forms before the concrete is placed.

C. All stainless steel fabrications shall be installed in conformance with details shown on the Contract Drawings or on the approved shop drawings.

* * * * *

15-EOD-RPTVC-001.01

Reconstruction of Bar Racks at Delaware Shaft 10

McLaren Report

LETTER OF TRANSMITTAL

M. G. McLAREN, P.C.
100 Snake Hill Road, West Nyack, NY 10994
PHONE (845) 353-6400 FAX (845) 353-6509

TO NYC Department of Environmental Protection
6 Overlook Court
North White Plains, NY 10603

DATE	August 18, 2014	JOB NO	111619
ATTN	Ralph Marchitelli		
	(347) 538-2253		
RE	NYCDEP On-Call Inspection Services		

WE ARE SENDING YOU THE FOLLOWING VIA FED EX 2nd Day

☐ Drawings ☐ CD ROM's ☑ Reports ☐ Calculations ☐ Specifications

☐ Proposal ☐ Change Order ☑ Other Inspection DVD's

COPIES	DATE	NO	DESCRIPTION
1	05/29/12		NYCDEP Shaft 10 - Inspection of Intake Racks 1-4; DVD
1	05/29/12		NYCDEP Shaft 10 - Inspection of Intake Racks 1-4; Video Time Line w/Deficiencies
1	05/29/12		NYCDEP Shaft 10 - Inspection of Intake Racks 1-4; Sounding Data

THESE ARE TRANSMITTED as checked below:

☐ For Approval ☑ As Requested

☐ For Your Use ☐ For Review and Comment

☐ Prints Returned after Loan to Us

REMARKS

.PDF Filepath / Filename

COPY TO cgs

File

(T) Indicates only Transmittal is being sent

If enclosures are not as noted, please notify us at once Revised 07/27/11 SIGNED: Carl Sundvik

NYCDEP SH 10, CARMEL, NY

5/29/2012 D1 VIDEO TIME LINE

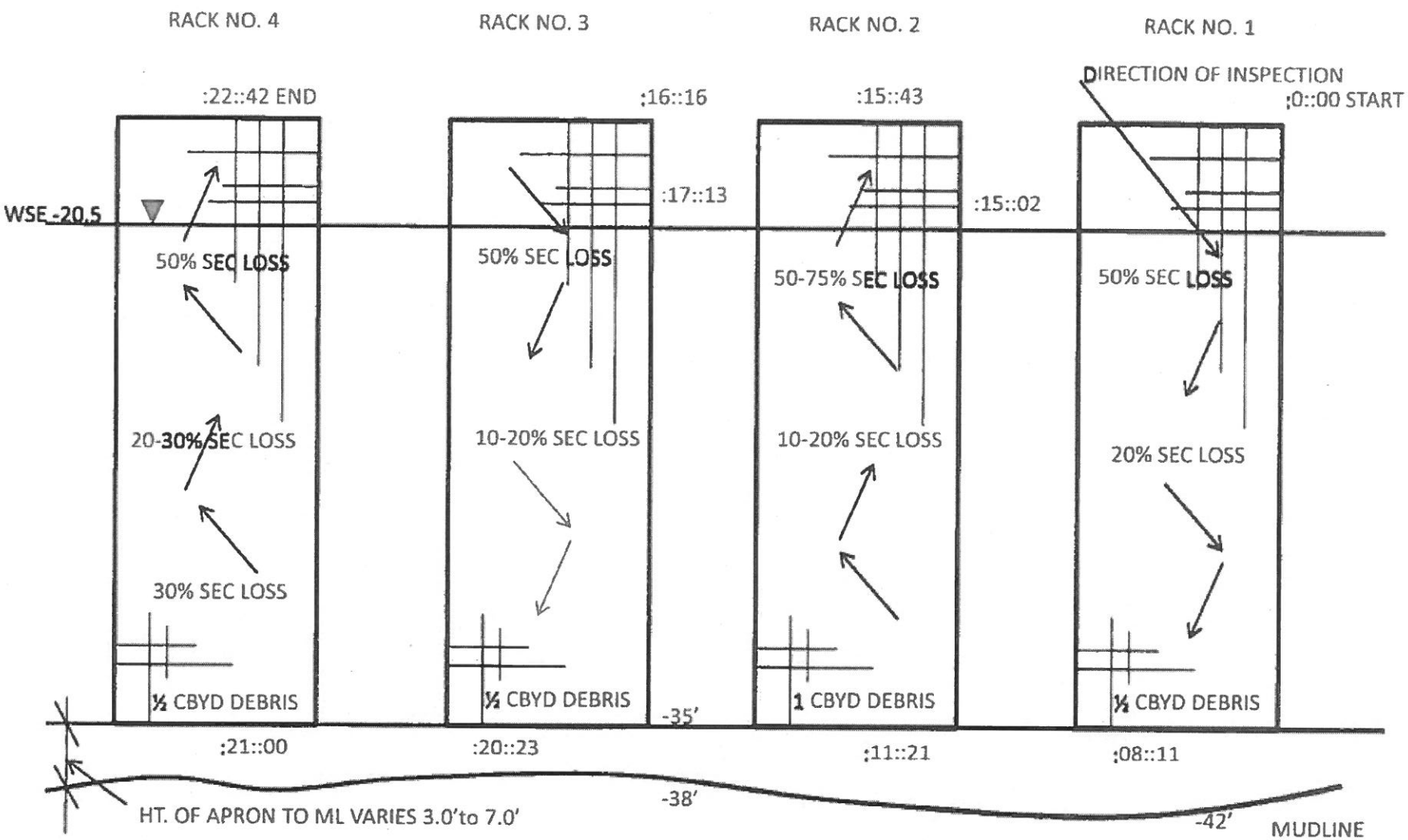

HT. OF APRON TO ML VARIES 3.0'to 7.0'

* CONCRETE EXHIBITS ½" SCALE THROUGHOUT W/ MINOR CRACKS UPTO 1/8"
* BAR RACK EXHIBITS UPTO 75% SEC LOSS FROM MHW TO -10'

NYCDEP SH 10, CARMEL, NY

5/29/2012 D2 VIDEO TIME LINE

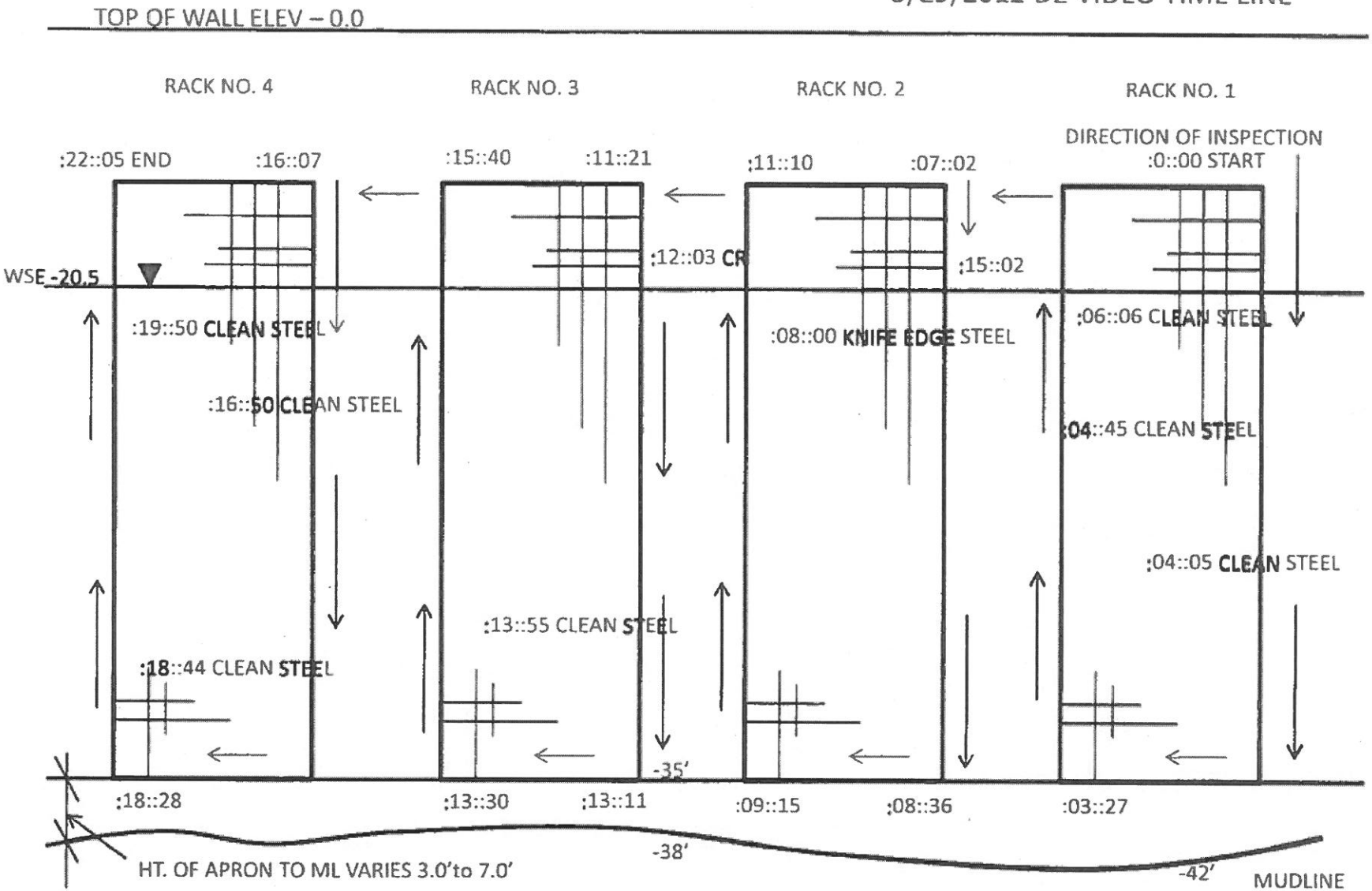

* CONCRETE EXHIBITS ½" SCALE THROUGHOUT W/ MINOR CRACKS UPTO 1/8", MINOR HOLLOWING AROUND CRACKS
* HORZ. CONSTRUCTION JOINTS SPACE 6.0' - 7.0' APART

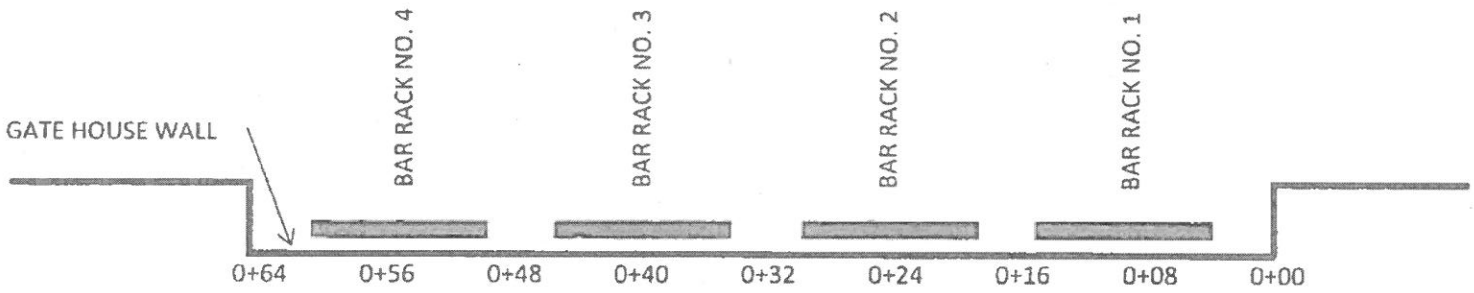

	0+64	0+56	0+48	0+40	0+32	0+24	0+16	0+08	0+00
0+00	29	42	43	42	42	42	43	43	43
0+08	31	42	42	42	42	42	43	43	42
0+16	31	41	41	41	41	42	42	43	42
0+24	35	41	41	41	41	41	41	41	41
0+32	38	39	40	40	41	41	41	41	40
0+40	37	38	39	39	39	39	39	39	39
0+48	36	38	38	38	38	38	38	38	38
0+56	37	37	38	38	38	38	38	37	38
0+64	37	38	39	40	38	38	38	38	37
0+72	39	38	38	38	38	37	38	37	37

BOUY
+/-80' FROM FACE OF PIER

New York City Environmental Protection
Emily Lloyd, Commissioner

Environmental Protection

Bureau of Water Supply
West of Hudson Operations
P.O. Box 358
Grahamsville, NY 12740

Bureau of Water Supply
East of Hudson Operations
465 Columbus Avenue
Valhalla, NY 10595

Detailed Scope of Work

Completed by JOC Project Engineer
Date: 11/09/2015

Basic Project Information

Job Order Number:	15-EOD-RPTVC-001.01
Name:	Reconstruction of Bar Racks at Delaware Shaft 10
Contract Number:	CRO-544G
Location:	Delaware Aqueduct Shaft 10

Detailed Scope of Work:

The Contractor shall furnish all labor, equipment, tools, materials and supervision to perform the following:

1. Replace all bar racks on four (4) aqueduct intake channels. The bar racks are located on the western gate house wall. Each intake has 7 bar racks stacked on top of each other. A total of 28 racks are required. The bottom of the lowest rack is approximately 20 feet submerged under the water surface. The work shall be in accordance with attached drawing Delaware Aqueduct, West Branch Effluent Chamber, Racks for Reservoir Waterways, Structural Details, Acc. 46993, dive inspection report of 5/29/2012, diving video, General Specification 05061 – Stainless Steel Work and as directed by the Engineer.

2. The existing grooves which the racks shall slide into are encased in concrete and shall be assumed to be in good condition. Contractor shall brush the grooves clean prior to installing the racks. See attached drawings for reference: Delaware Aqueduct, West Branch Effluent Chamber, Cast Iron Screen and Stop Shutter Grooves, Acc. 45127 and Delaware Aqueduct, West Branch –Kensico Tunnel, West Branch Effluent Chamber, Cast Iron Rack and Stop Shutter Grooves, Acc. 45126.

3. The racks shall be Type 316L Stainless Steel. The bar rack manufacturer shall have been in continuous and successful operation under similar conditions for at least 3 years.

4. The drawings show riveted construction. The contractor can install welded construction but shall submit a calculation showing that each welding detail has similar strength as the riveted connection. Contractor shall assure that lines are straight and profile is true to intention.

5. Structural members shall be similar in size and weight to the existing members. No substitutions shall be made unless approved by the engineer except for the following members:

5.a The 5x11.5 channel which forms a frame around each rack may be substituted for a 5x9 channel.

5.b The original construction has a four inch Channel clip to attach the 3"x5/8" bars to the channel and I-beam. The clip has rivets in the web and flanges. Very little side load will impact the bars. The contractor may substitute the channel clips with 5/8" spacer plates as shown in the attached sketch if he can demonstrate that the welded connection equals or

exceeds the original construction with regard to pull-out and shear forces, as per attached Proposed Sketch Spacer Plates

6. Install a UHMW bearing and guide strip onto the vertical channels which are inserted into the existing grooves, in order to isolate the metals from galvanic action. The strips shall be countersunk and attached to the channel with minimum four (4) bolts with nylon inserted nuts, in accordance with Proposed Sketch UHMW Strips, attached hereto. If space allows, a strip shall also be attached on the exterior side of the channel web, see option A. The contractor shall assume in his cost proposal that space is available for this endstrip (or boot) which will be dive field-verified. The existing corner plates shall be reduced in size such that they will not protrude out from the surface of the channels. The triangular plates shall be fully welded to the flanges of the channel profile.

7. For proof of the correct material grade, a mill certificate is required. If any materials are manufactured outside United States, a notarized letter to attest that the material being supplied is the correct grade shall be required. DEP also reserves the right to enter any contractor's location or field site in the US to verify the correct chemical grade.

8. It is the Contractor's responsibility to submit calculations demonstrating that the welded connections are similar or exceeds all existing riveted connections with regard to pull-out and shear resistance.

9. The replacement shall be done on one intake channel at a time. During replacement, the reservoir gate for that channel will be shut down, stopping the flow during replacement. The racks shall be lifted out through a removable concrete cover located just adjacent to the western wall. See attached photo.

10. There will be a LOTO procedure for each shutdown which the diving team must adhere to.

11. The contractor shall assume that five (5) cubic yards of debris accumulated at base of the screens must be removed. If actual quantity exceeds 5 cubic yards, a supplemental job order shall be issued.

12. Perform a dive inspection to verify existing conditions, assess debris and condition of guide racks. Verify all dimensions of the attached drawings prior to shop drawing submission. The reservoir gates will be shut down for this operation such that no flow exists during diving.

13. Construct a bar rack lifter as shown on attached drawing Delaware Aqueduct, West Branch Effluent Chamber, Rack Lifter, Acc. 55682. The rack lifter shall then be used to lift up the racks. Stainless Steel shall be grade 316L.

14. The Contractor shall supply a complete "Dive Team" to ensure proper compliance with all rules and regulations.

14.1 The dive team shall consist, at a minimum, but not limited to, one (1) diver, one (1) diver/tender and one (1) dive supervisor (designated Person-in-Charge) additional divers may be added as required. All personnel required to support the dive team shall be provided by the Contractor. In establishing the number of dive team members required for a particular situation, proper consideration must be given to: planning assessment (see 1910.421(e)); hazardous activities; and providing a means to assist an injured diver from the water (see 1910.422(a)(3)).

14.2 The diver shall have at least three (3) years of experience and the dive tender shall have at least two (2) years of experience performing this type of work. Divers and dive tenders shall show proof of current certification. The lowest

apparent bidder must provide within 5 days of notification from NYC DEP proof of current certification.

14.3. A qualified diving supervisor shall be in charge of every diving operation. The dive supervisor shall be responsible for all aspects of the dive operation, including but not limited to: job planning, coordination of activities, record keeping, and leading the response to emergencies.

14.4. The dive supervisor shall have knowledge of and ensure compliance with all applicable government regulations. These regulations include, but are not limited to:

14.5. All applicable OSHA regulations and NYC DEP EHS Policies & Procedures.

14.6. Title 29 of the Code of Federal Regulations, Part 1910, Subpart T, Sections 401 through 441.

14.7. The latest requirements of the "Consensus Standards for Commercial Diving Operations" issued by the Association of Diving Contractors.

14.8. ADC International 11-1999 - Commercial Diving in Potable Water Facilities (current edition)

14.9. ANSI/AWWA C652-92 - AWWA Standard for Disinfection of Potable Water Facilities.

14.10. ANSI/AWWA D101-53 (R86) - Standard for Inspecting and Repairing Water tanks, Standpipes, Reservoirs, and Elevated Tanks for Water Storage (Parts A & B).

14.11. All other applicable Federal, State, and local safety codes governing this type of work.

15. The diving Contractor shall supply all diving-related equipment and supplies such as but not limited to; compressors, tanks, hoses, air supply, time keeping device, log books, communication equipment. The Contractor shall also provide personnel hoists as necessary, to complete any and all work associated with this project. If necessary, the rental of a decompression chamber and/or underwater burning shall be listed separately on the proposal.

16. The contractor shall provide written evidence of having at least five years of experience performing the types of work covered by this contract and shall include the names of current and previous customers with whom the contractor has done similar work. The contractor shall also supply a summary of corporate qualifications and experience of all supervisory personnel, and of all divers and dive tenders. Proof of General Liability Insurance is required by the City and shall be provided by the contractor.

17. All personnel hoists, work platforms, or other means of lowering and hoisting divers into the work area shall be supplied by the Contractor and shall be certified by the manufacturer and approved by OSHA for such service. City-owned cranes, gantries and hoists will only be available for material handling and shall not be used for transport of personnel.

18. Safe Work Plan: All work by the Contractor or his subcontractors shall be performed in accordance with all applicable Federal, State and local Environmental, Health and Safety (EHS) laws and regulations as well as NYCDEP's EHS Policies and Procedures, which may be more strict than OSHA, NYSDEC, USEPA or other applicable Federal,

State and local EHS rules and regulations.

19. Progress Schedule: Submit with the Detailed Proposal, a complete detailed construction schedule, such as Microsoft Project, bar-chart or equivalent approved progress schedule.

20. Furnish As-Built drawings as specified hereunder:
Two (2) sets paper Architectural D Size
Two (2) sets Electronic (CD-R/DVD) PDF Format
Two (2) sets Electronic (CD-R/DVD) Autocad Format

21. DEP reserves the right to perform shop inspections during manufacturing of the screens.

22. Reference Materials
The following reference drawings and reports are included in this Detailed Scope:
-Delaware Aqueduct, West Branch Effluent Chamber, Racks for Reservoir Waterways, Structural Details, Acc. 46993.
- Delaware Aqueduct, West Branch Effluent Chamber, Rack Lifter, Acc. 55682.
- Delaware Aqueduct, West Branch Effluent Chamber, Cast Iron Screen and Stop Shutter Grooves, Acc. 45127.
- Delaware Aqueduct, West Branch Effluent Chamber, Cast Iron Rack and Stop Shutter Grooves, Acc. 45126.
- General Specification 05061 – Stainless Steel Work
- Photo of removable concrete covers.
- Google Earth Image of West Branch Effluent Chamber.
- NYCDEP Shaft 10, Carmel NY 5/29/2012 Dive inspection report sketch and CD.

Sven Niel

Sven Nielsen, JOC Program Engineer

11/09/2015

Date